Johnson Controls

February, 19 2010

TRANSMITTAL LETTER

TO: Rick Jones
City od Dover, NH

DATE: February 19, 2010
FROM:
PROJECT:
PROJECT #:

We are sending you: ☐ **Enclosed/Attached** ☐ **Under Separate Cover**

- ☐ Shop Drawings
- ☐ Plans
- ☐ Specifications
- ☐ Damper Schedules
- ☐ Valve Schedules
- ☐ Product Data Sheets
- ☐ Copy of Letter
- ☐ Samples
- ☐ Room Schedules
- ☐ Door Schedules
- ☐ Copy of Letter
- ☒ Submittals
- ☐ Operations & Maint. Manuals
- ☐ Device Schedules

This material/information is being sent:

- ☐ per your request.
- ☒ for your review and approval.
- ☐ for your review and comment.
- ☐ for your record purposes
- ☐ approved as submitted.
- ☐ approved as noted.
- ☐ for correction & resubmittal.
- ☐ for issue to subcontractors.

Information Sent	# of Copies	Date Above Action Required By	Comments
1. Pool Dehumidification Equipment	1		
2.			
3.			
4.			
5.			
6.			

Message/Comments:
sent via email

Delivered by: Aaron Alibrio Date: 2/19/10
Received by: Date:

C.A.S. Quote # / C.A.S Job #	1885 / 8203	*Bid Specification Section*	
Project Name	Dover Pool	*Bid Drawings*	
Project Location	Dover, NH	*Date Prepared*	12/15/2009
Quoted to (C.A.S. Representative)	DAC Sales	*Prepared By*	CJR
Quoted to Contact Name	Teri Shannon	*Revision Date*	1/11/2009
Quoted to Phone #	207.985.0873	*Revision #*	1
Quoted to Fax #	207.985.0874	*Revised By*	MB

GENERAL UNIT DATA

Unit Tag	DH-1	*Sectional Unit / # of Sections*	No / Not Applicable
Unit to Service	Pool	*Weight of Heaviest Section*	T.B.D.
Unit Location	Outdoor (on Concrete Slab)	*Unit Access Side*	See Unit Drawings
Unit Capacity - CFM	13,500-SA / 14,000-RA	*Roof Curb Required / By Whom*	No / Not Applicable
Unit Dimensions - L" x W" x H"	168 x 120 x 98	*Roof Curb Type / Height - "*	Not Applicable
Unit Weight (Approximate)	T.B.D.		

UNIT CASING DATA

BASE RAIL CONSTRUCTION		WALL PANEL CONSTRUCTION	
Perimeter Base Rail Material	C6 Structural Aluminum	*Exterior Skin Material*	0.063 Aluminum
Intermediate Base Rail Material	C6 Structural Aluminum	*Insulation Material*	3# Density Rigid Foam
Roof Curb Pocket Required	No	*Insulation Thickness (in inches)*	2.00
FLOOR PANEL CONSTRUCTION		*Interior Material*	0.063 Aluminum
Under Skin Material	0.063 Aluminum	*Seam construction*	Double Overlap
Insulation Material	3# Density Rigid Foam	**ROOF PANEL CONSTRUCTION**	
Insulation Thickness (in inches)	2.00	*Exterior Skin Material*	0.063 Aluminum
Inner Skin Material	0.063 Aluminum	*Insulation Material*	3# Density Rigid Foam
Seam construction	Single Overlap	*Insulation Thickness (in inches)*	2.00
Upper Floor Pans Required	No	*Interior Material*	0.063 Aluminum
Upper Floor Pan Material	Not Applicable	*Seam construction*	Double Overlap
Emergency Floor Drains Req'd	No	**OUTER ROOF CAP**	
Floor Drain Locations	Not Applicable	*Outer Roof Cap Required*	Yes
		Outer Roof Cap Pitch	1/4" per FT
		Outer Roof Cap Material	0.063 Aluminum

EXTERIOR FINISH

Exterior Finish Required	No	*Color Selection*	Not Applicable
Type of Finish	Not Applicable	*Custom Color Brand & Part #*	Not Applicable

STATIC PRESSURE PROFILE

SUPPLY AIR STREAM		RETURN AIR STREAM	
COMPONENT	SP "WC"	COMPONENT	SP "WC"
OA Hood & Damper	0.20	*RA Filter Bank*	0.23
SA Filter Bank	0.22	*RA Fan Plenum Effect*	0.20
Heat Pipe	0.75	*Heat Pipe*	1.37
SA Fan Plenum Effect	0.40	*Exhaust Damper*	0.20
Total Internal SP	1.57	*Total Internal SP*	2.00
Filter Loading	0.22	*Filter Loading*	0.23
Total (Available) External SP	1.00	*Total (Available) External SP*	0.75
Total SP	2.79	*Total SP*	2.98

SUPPLY FAN DATA

Quantity of Fans	1	*Manufacturer*	Greenheck
Supply Fan Air Flow - CFM	13,500	*Model Number*	30-QEP-3-II
External Static Pressure	1.00	*Type*	Plenum
Total Static Pressure	2.79	*Arrangement*	3
Outlet Velocity	1,971	*Rotation*	Clockwise
Fan Speed - RPM	1,173	*Discharge*	Horizontal
Motor BHP	8.64	*Drive Type*	Belt-Drive
Motor HP	10.0	*Fan Class*	II
Motor Enclosure	TEFC	*Motor Location*	Top
Voltage	208/60/3	*Fan Sled Type*	Not Applicable
		Isolation Type	Restrained
Accessories:	1) L10-200K Bearings	*Isolation Deflection*	1"
	2) Belt Guard	*VFD Required / by Whom*	Yes - By C.A.S.
	3) Protective Cage	*VFD Manufacturer*	Yaskawa
	4) Extended Lube Lines	*VFD Model #*	E7BVD030
	5) Industrial Epoxy Coating		

RETURN FAN DATA

Quantity of Fans	1	*Manufacturer*	Greenheck
Supply Fan Air Flow - CFM	14,000	*Model Number*	30-QEP-3-II
External Static Pressure	0.75	*Type*	Plenum
Total Static Pressure	2.98	*Arrangement*	3
Outlet Velocity	2,044	*Rotation*	Clockwise
Fan Speed - RPM	1,214	*Discharge*	Horizontal
Motor BHP	9.58	*Drive Type*	Belt-Drive
Motor HP	10.0	*Fan Class*	II
Motor Enclosure	TEFC	*Motor Location*	Top
Voltage	208/60/3	*Fan Sled Type*	Not Applicable
		Isolation Type	Restrained
Accessories:	1) L10-200K Bearings	*Isolation Deflection*	1"
	2) Belt Guard	*VFD Required / by Whom*	Yes - By C.A.S.
	3) Protective Cage	*VFD Manufacturer*	Yaskawa
	4) Extended Lube Lines	*VFD Model #*	E7BVD030
	5) Industrial Epoxy Coating		

HEAT PIPE DATA (R-134A REFRIGERANT USED)

SUPPLY AIR SIDE (PERFORMANCE)		EXHAUST AIR SIDE (PERFORMANCE)	
Air Pressure Drop - " W.C.	0.75	*Air Pressure Drop - " W.C.*	1.37
Delta T, °F	46.24	*Delta T, °F*	29.17
Temp Efficiency %	56.39	*Temp Efficiency %*	35.57
Condensation (lbs/hr)	0.00	*Condensation (lbs/hr)*	211.62
Air-Entering (Supply)		**Air-Entering (Exhaust)**	
Design Air Flow - CFM	13,500	*Design Air Flow - CFM*	14,000
E.A.T. DB / WB, °F	0.00 / -1.00	*E.A.T. DB / WB, °F*	82.00 / 68.50
Relative Humidity %	67.00	*Relative Humidity %*	50.66
Air-Leaving (Supply)		**Air-Leaving (Exhaust)**	
Design Air Flow - CFM	13,500	*Design Air Flow - CFM*	14,000
E.A.T. DB / WB, °F	46.24 / 31.80	*E.A.T. DB / WB, °F*	52.83 / 52.83
Relative Humidity %	8.02	*Relative Humidity %*	100.00

SUPPLY AIR SIDE (PHYSICAL DATA)		EXHAUST AIR SIDE (PHYSICAL DATA)	
Fin Height (in.)	60.00	*Fin Height (in.)*	60.00
Finned Length (in.)	54.00	*Finned Length (in.)*	54.00
Face Area (Sq Ft.)	22.50	*Face Area (Sq Ft.)*	22.50
Face Velocity (SFPM)	600.00	*Face Velocity (SFPM)*	622.22
# of Rows	6	*# of Rows*	6
Tube O.D. (in.)	0.50	*Tube O.D. (in.)*	0.50
Fins Per Inch	12	*Fins Per Inch*	12
Fin Type	Standard	*Fin Type*	Standard

SUPPLY AIR PRE-FILTER DATA

Design Air Flow - CFM	13,500	*Filter Media Manufacturer*	Farr
Efficiency	30%	*Filter Media Model*	30/30
Qty / Size of Filter Media	12 / 16"x25"x2"	*Loading Method*	Side
Air Pressure Drop - " W.C.	0.22	*Qty / Model of Filter Gauges*	1 / #2001-ASF
Velocity - FPM	405	*Qty / Type of Filter Clips*	Not Applicable
Media Holding Method	Angle Slide Rack	*Filter Clip Material*	Not Applicable
Qty / Size of Frames	Not Applicable	*# of sets of Media (Total)*	Two
Material of Frames	Not Applicable	*MERV Rating*	8

RETURN AIR PRE-FILTER DATA

Design Air Flow - CFM	14,000	*Filter Media Manufacturer*	Farr
Efficiency	30%	*Filter Media Model*	30/30
Qty / Size of Filter Media	12 / 16"x25"x2"	*Loading Method*	Side
Air Pressure Drop - " W.C.	0.23	*Qty / Model of Filter Gauges*	1 / #2001-ASF
Velocity - FPM	420	*Qty / Type of Filter Clips*	Not Applicable
Media Holding Method	Angle Slide Rack	*Filter Clip Material*	Not Applicable
Qty / Size of Frames	Not Applicable	*# of sets of Media (Total)*	Two
Material of Frames	Not Applicable	*MERV Rating*	8

DAMPER DATA

OUTSIDE AIR DAMPER		EXHAUST AIR DAMPER	
Design Air Flow - Max CFM	13,500	*Design Air Flow - Max CFM*	14,000
Manufacturer / Model #	Greenheck / #VCD-43	*Manufacturer / Model #*	Greenheck / #VCD-43
Quantity	1	*Quantity*	1
Damper Width	44.00	*Damper Width*	24.00
Damper Height	66.00	*Damper Height*	60.00
Velocity - FPM	669	*Velocity - FPM*	1,400
Blade Configuration	Opposed	*Blade Configuration*	Opposed
Blade Mounting Position	Horizontal	*Blade Mounting Position*	Horizontal
Frame Material	Aluminum	*Frame Material*	Aluminum
Blade Material	Aluminum	*Blade Material*	Aluminum
Linkage Material		*Linkage Material*	Stainless Steel
Axle Material	Stainless Steel	*Axle Material*	Stainless Steel
Coatings	None	*Coatings*	None
Actuator(s) Required	Yes - By C.A.S.	*Actuator(s) Required*	Yes - By C.A.S.
Actuator(s) Manufacturer/ Model#	Belimo / AF-24MFTS	*Actuator(s) Manufacturer/ Model#*	Belimo / NF-24SR-S

RECIRCULATION DAMPER	
Design Air Flow - Max CFM	9,500
Manufacturer / Model #	Greenheck / #VCD-43V
Quantity	1
Damper Width	16.00
Damper Height	60.00
Velocity - FPM	1,425
Blade Configuration	Opposed
Blade Mounting Position	Vertical
Frame Material	Aluminum
Blade Material	Aluminum
Linkage Material	Stainless Steel
Axle Material	Stainless Steel
Coatings	None
Actuator(s) Required	Yes - By C.A.S.
Actuator(s) Manufacturer/ Model#	Belimo / AF-24MFTS

EXHAUST AIR BYPASS DAMPER (HEAT PIPE)	
Design Air Flow - Max CFM	9,500
Manufacturer / Model #	Greenheck / #VCD-43
Quantity	1
Damper Width	12.00
Damper Height	53.00
Velocity - FPM	2,151
Blade Configuration	Opposed
Blade Mounting Position	Horizontal
Frame Material	Aluminum
Blade Material	Aluminum
Linkage Material	Stainless Steel
Axle Material	Stainless Steel
Coatings	None
Actuator(s) Required	Yes - By C.A.S.
Actuator(s) Manufacturer/ Model#	Belimo / TF24-SR-S

SUPPLY AIR BYPASS DAMPER (HEAT PIPE)	
Design Air Flow - Max CFM	9,500
Manufacturer / Model #	Greenheck / #VCD-43
Quantity	1
Damper Width	12.00
Damper Height	53.00
Velocity - FPM	2,151
Blade Configuration	Opposed
Blade Mounting Position	Horizontal
Frame Material	Aluminum
Blade Material	Aluminum
Linkage Material	Stainless Steel
Axle Material	Stainless Steel
Coatings	None
Actuator(s) Required	Yes - By C.A.S.
Actuator(s) Manufacturer/ Model#	Belimo / TF24-SR-S

ACCESS DOORS

Exterior Skin Material	0.063 Smooth Aluminum	*Manufacturer*	Cambridgeport
Insulation Material	Per Manufacturer Standards	*Hinge*	Per Manufacturer Standards
Insulation Thickness (in inches)	2.00	*Qty of Latches*	Per Manufacturer Standards
Interior Skin Material	0.063 Smooth Aluminum	*Type of Latches*	Per Manufacturer Standards
Frame Material	Extruded Aluminum	*Gasket*	Per Manufacturer Standards
Thermal Break Frame	Yes - On All Doors	*Viewports Req'd*	No
		Viewports on Which Doors	Not Applicable
		Type of Viewports	Not Applicable

POWER PACKAGE

# of Feeds Required	1		
Voltage	208/60/3		

CONTROL PACKAGE

# of Feeds Required	1	*VFD's Required*	Yes - By CAS
Controls Supplied By	By CAS		
Wiring Method	Aluminum Rigid Conduit		

REVISIONS			
REV #	DESCRIPTION	DATE	REVISED BY
1	REMOVED RETURN AIR FREEZE STAT, RETURN AIR TT	12/18/09	CJR
2	ADDED SUPPLY AIR FREEZE STAT, SMOKE DETECTOR	1/11/10	SDH

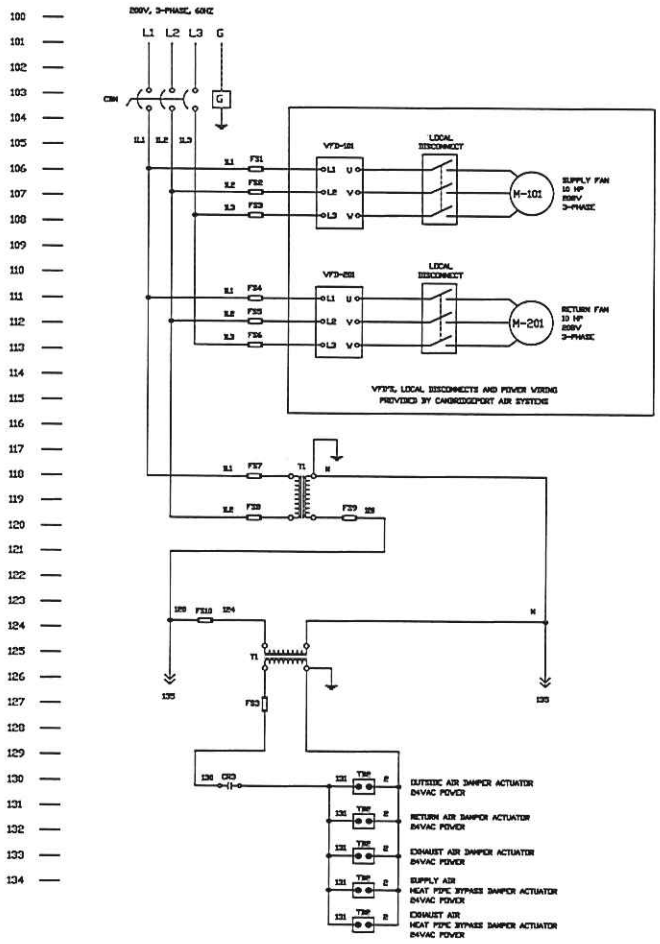

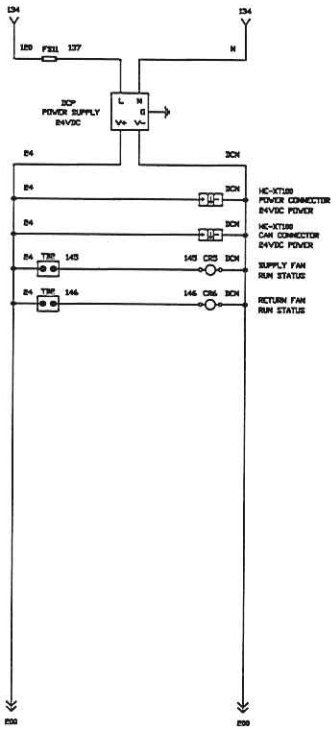

UL508A LISTED

CUSTOM AIR SOLUTIONS

custom air solutions by Cambridgeport

AHU #	CFM	REVISION #	REVISON DATE	DESCRIPTION	ELECTRICAL CONTROL DIAGRAM
DH-1	13,500-SA / 14,000-RA	2	1/11/10	JOB NAME	DOVER POOL
				Q# or JOB#	Q-1885
				SCALE	NTS
				DATE	12/15/09
				DRAWN BY	CJR
				PAGE	1 OF 5

THE INFORMATION CONTAINED IN THIS DOCUMENT IS PROPRIETARY TO CUSTOM AIR SOLUTIONS/CAS. THIS DOCUMENT MAY NOT BE ISSUED TO ANOTHER PARTY WITHOUT PRIOR WRITTEN CONSENT AND AUTHORIZATION. CUSTOM AIR SOLUTIONS & CAS LOGO ARE REGISTERED TRADEMARKS. ALL RIGHTS RESERVED.

REVISIONS			
REV #	DESCRIPTION	DATE	REVISED BY
1	REMOVED RETURN AIR FREEZE STAT, RETURN AIR TT	12/18/09	CJR
2	ADDED SUPPLY AIR FREEZE STAT, SMOKE DETECTOR	1/11/10	SDH

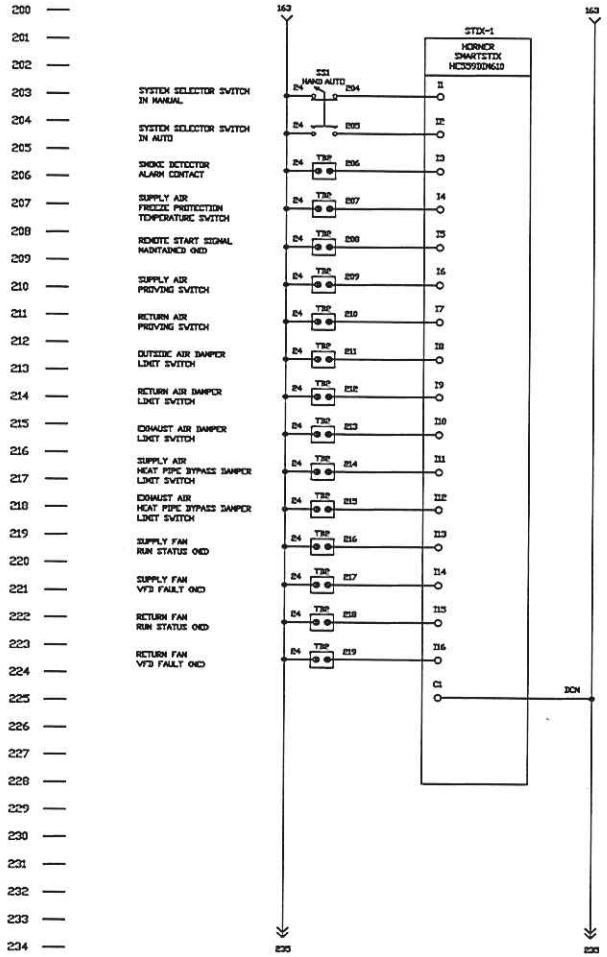

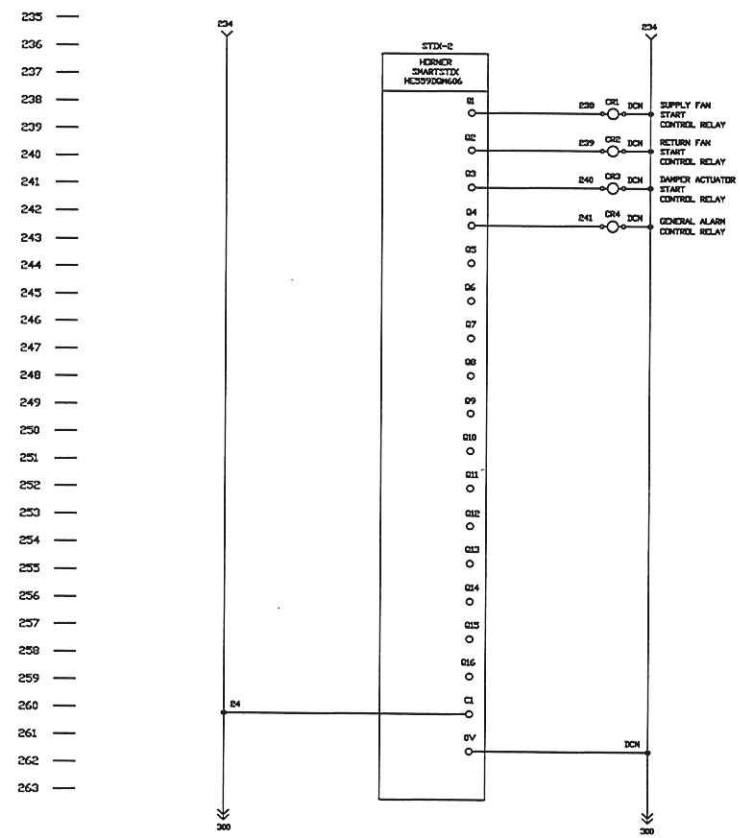

UL508A LISTED

custom air solutions by Cambridgeport

CUSTOM AIR SOLUTIONS

AHU #	CFM	REVISION #	REVISON DATE	DESCRIPTION	ELECTRICAL CONTROL DIAGRAM		
DH-1	13,500-SA / 14,000-RA	2	1/11/10	JOB NAME	DOVER POOL		
				Q# or JOB#	Q-1885		
				SCALE	NTS	DATE	12/15/09
				DRAWN BY	CJR	PAGE	2 OF 5

THE INFORMATION CONTAINED IN THIS DOCUMENT IS PROPRIETARY TO CUSTOM AIR SOLUTIONS/CAS. THIS DOCUMENT MAY NOT BE ISSUED TO ANOTHER PARTY WITHOUT PRIOR WRITTEN CONSENT AND AUTHORIZATION. CUSTOM AIR SOLUTIONS & CAS LOGO ARE REGISTERED TRADEMARKS. ALL RIGHTS RESERVED.

REVISIONS			
REV #	DESCRIPTION	DATE	REVISED BY
1	REMOVED RETURN AIR FREEZE STAT, RETURN AIR TT	12/18/09	CJR
2	ADDED SUPPLY AIR FREEZE STAT, SMOKE DETECTOR	1/11/10	SDH

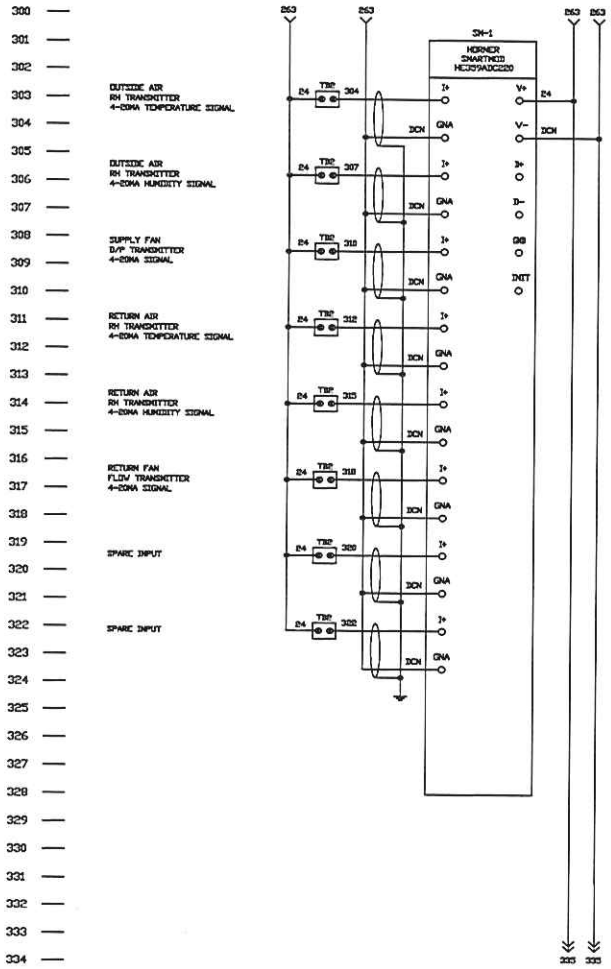

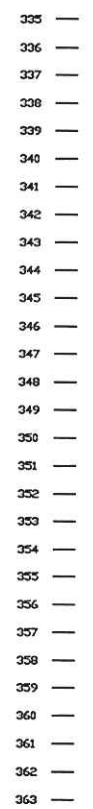

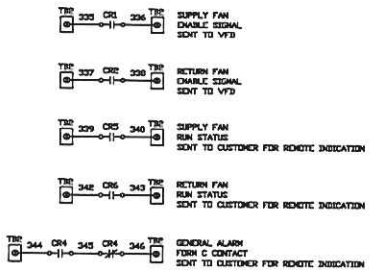

UL508A LISTED

custom air solutions by Cambridgeport

CUSTOM AIR SOLUTIONS

AHU #	CFM	REVISION #	REVISON DATE	DESCRIPTION	ELECTRICAL CONTROL DIAGRAM		
DH-1	13,500-SA / 14,000-RA	2	1/11/10	JOB NAME	DOVER POOL		
				Q# or JOB#	Q-1885		
				SCALE	NTS	DATE	12/15/09
				DRAWN BY	CJR	PAGE	3 OF 5

THE INFORMATION CONTAINED IN THIS DOCUMENT IS PROPRIETARY TO CUSTOM AIR SOLUTIONS/CAS. THIS DOCUMENT MAY NOT BE ISSUED TO ANOTHER PARTY WITHOUT PRIOR WRITTEN CONSENT AND AUTHORIZATION. CUSTOM AIR SOLUTIONS & CAS LOGO ARE REGISTERED TRADEMARKS. ALL RIGHTS RESERVED.

REVISIONS			
REV #	DESCRIPTION	DATE	REVISED BY
1	REMOVED RETURN AIR FREEZE STAT, RETURN AIR TT	12/18/09	CJR
2	ADDED SUPPLY AIR FREEZE STAT, SMOKE DETECTOR	1/11/10	SDH

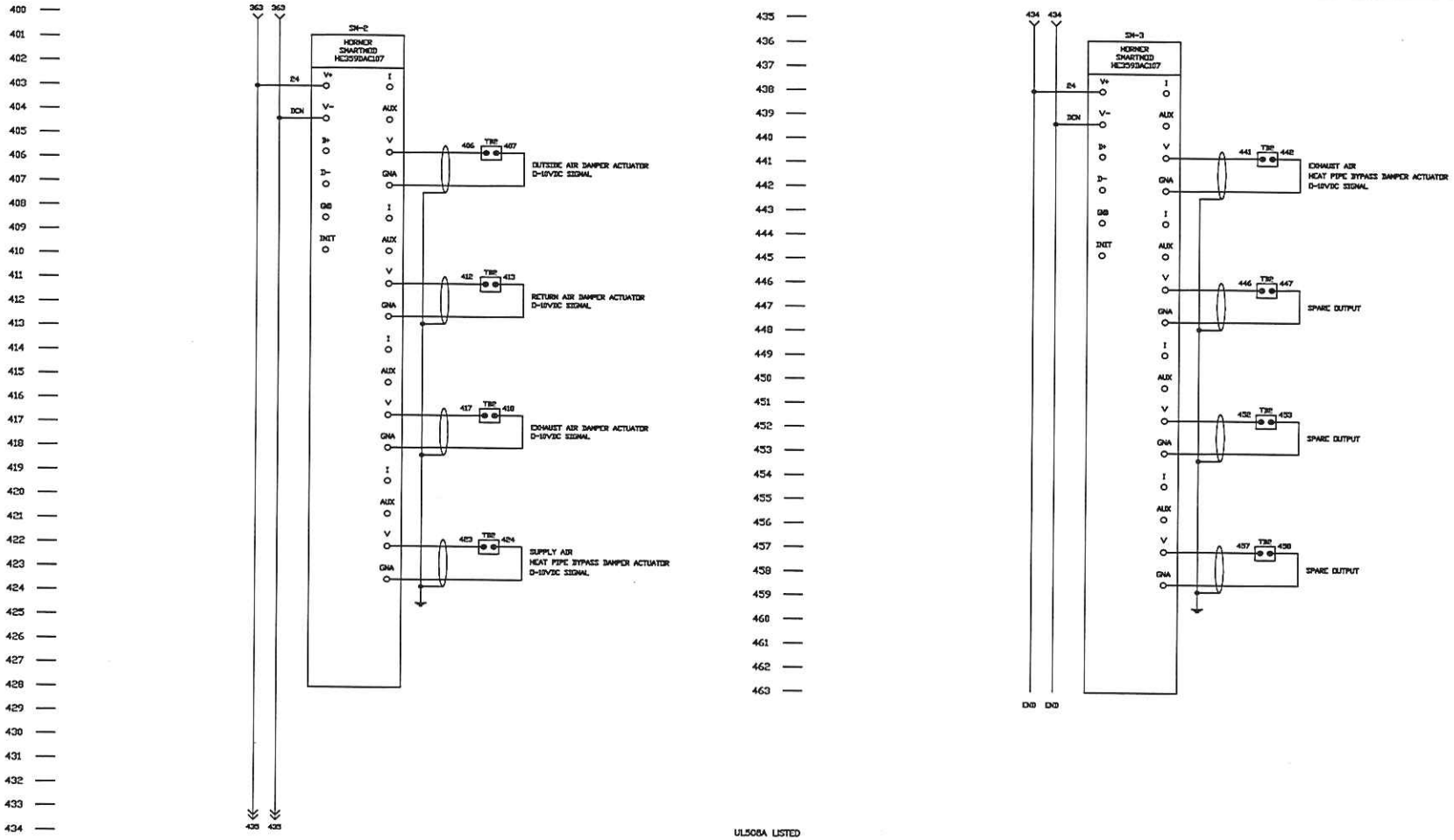

UL508A LISTED

custom air solutions by Cambridgeport

CUSTOM AIR SOLUTIONS

AHU #	CFM	REVISION #	REVISON DATE	DESCRIPTION	ELECTRICAL CONTROL DIAGRAM		
DH-1	13,500-SA / 14,000-RA	2	1/11/10	JOB NAME	DOVER POOL		
				Q# or JOB#	Q-1885		
				SCALE	NTS	DATE	12/15/09
				DRAWN BY	CJR	PAGE	4 OF 5

THE INFORMATION CONTAINED IN THIS DOCUMENT IS PROPRIETARY TO CUSTOM AIR SOLUTIONS/CAS. THIS DOCUMENT MAY NOT BE ISSUED TO ANOTHER PARTY WITHOUT PRIOR WRITTEN CONSENT AND AUTHORIZATION. CUSTOM AIR SOLUTIONS & CAS LOGO ARE REGISTERED TRADEMARKS. ALL RIGHTS RESERVED.

REVISIONS			
REV #	DESCRIPTION	DATE	REVISED BY
1	REMOVED RETURN AIR FREEZE STAT, RETURN AIR TT	12/18/09	CJR
2	ADDED SUPPLY AIR FREEZE STAT, SMOKE DETECTOR	1/11/10	SDH

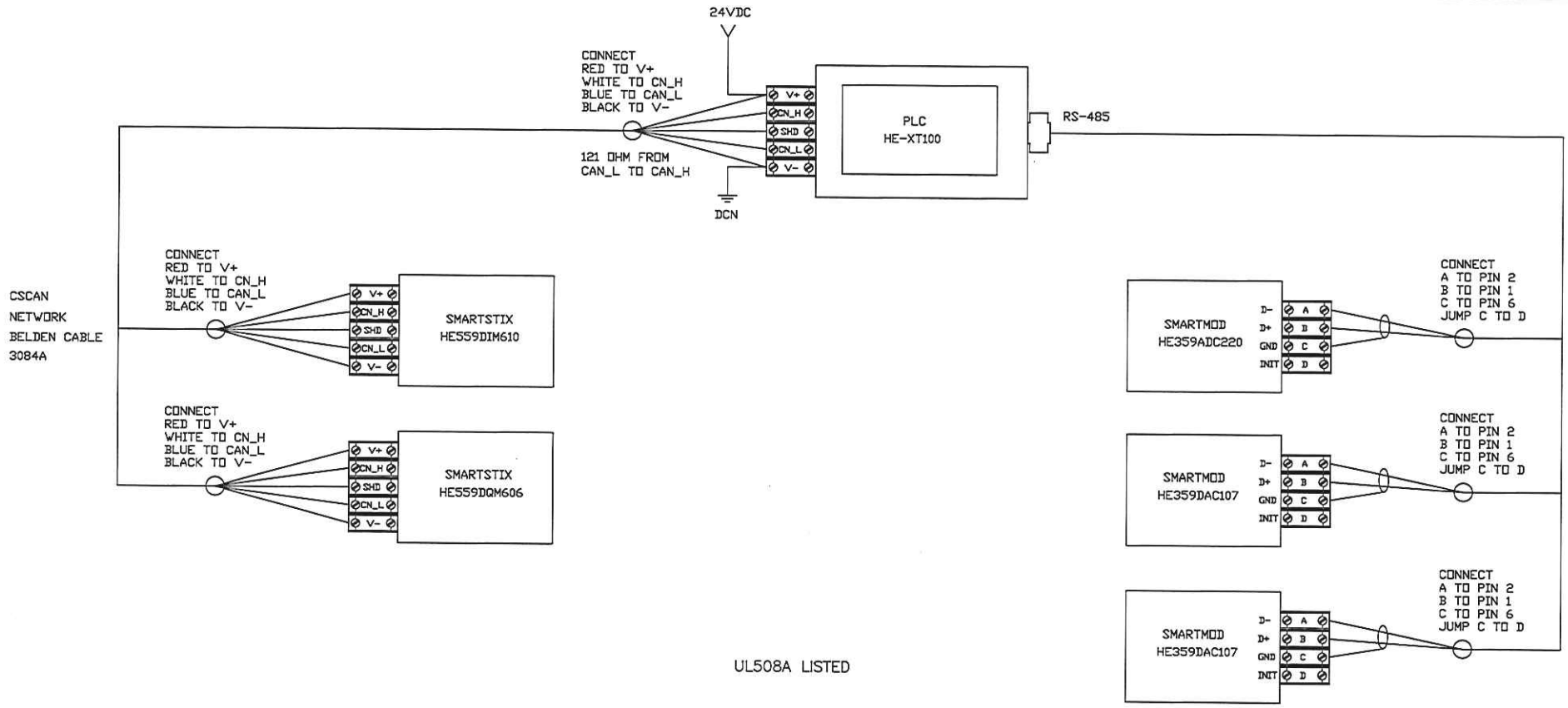

custom air solutions by Cambridgeport

CUSTOM AIR SOLUTIONS

AHU #	CFM	REVISION #	REVISON DATE	DESCRIPTION	ELECTRICAL CONTROL DIAGRAM		
DH-1	13,500-SA / 14,000-RA	2	1/11/10	JOB NAME	DOVER POOL		
				Q# or JOB#	Q-1885		
				SCALE	NTS	DATE	12/15/09
				DRAWN BY	CJR	PAGE	5 OF 5

THE INFORMATION CONTAINED IN THIS DOCUMENT IS PROPRIETARY TO CUSTOM AIR SOLUTIONS/CAS. THIS DOCUMENT MAY NOT BE ISSUED TO ANOTHER PARTY WITHOUT PRIOR WRITTEN CONSENT AND AUTHORIZATION. CUSTOM AIR SOLUTIONS & CAS LOGO ARE REGISTERED TRADEMARKS. ALL RIGHTS RESERVED.

Sequence of Operation

Date: 12/18/08 Rev: 1 Revision Date: 1/11/09

Revision 1 Notes:

1. Added smoke detector contacts
2. Added supply air freeze protection

PROJECT: Dover Pool
MFG: Cambridgeport Air Systems

The sequence of operation for the Pool Dehumidification Unit shall be as follows:

A negative pressure is maintained in the pool area at all times. Supply air and exhaust air fans run continuously to provide fresh air and good air circulation within the space. Both fans shall be controlled by variable frequency drives (Control by others).

The unit shall be PLC controlled. A Human-Machine Interface (HMI) shall be provided.

The unit shall be supplied with a Hand-Off-Auto switch. In Auto, the unit will wait for a maintained enable signal through a dry set of contacts. Once the maintained enable signal is received, the unit shall operate the same as if it were in Hand mode.

In Hand mode, the unit shall operate as follows:

1. The Outside Air Damper (ACT-101), Return Air Damper (ACT-201), and Exhaust Air Damper (ACT-203) shall open to their minimum positions.
2. Upon proof of opening through end switches on the actuators (LS-101, LS-201, & LS-203), an enable signal shall be sent to the return fan VFD (VFD-201).
   a. Return Fan shall be controlled by others. The system is designed for 14,000 CFM
3. Upon proof of return air flow through the return fan pressure switch (APS-201), an enable signal shall be sent to the supply fan VFD, (VFD-101).
   a. Supply Fan shall be controlled by others. The system is designed for 13,500 CFM
4. Differential pressure sensors shall be provided to both the supply fan (DPT-101) and return fan (DPT-201). If the differential pressure exceeds the set point (adjustable), the unit shall alarm and shut down.
5. After a two minute delay from the Return Fan enable, humidity control shall be enabled.
   a. Return Air dew point shall be calculated from a unit mounted humidity/temperature sensor (RH/TT-201).
   b. Outside Air dew point shall be calculated from a unit mounted humidity/temperature sensor, (RH/TT-101).

c. If the Outside air dew point is higher than the return air dew point set point (Adjustable), maintain minimum outside air conditions.
d. If the Outside air dew point is lower than the return air dew point set point, the outside air damper, return air damper, & exhaust air dampers shall modulate to maintain the dew point set point (Adjustable).
e. If the Return Air Temperature is higher than 85F (Adjustable), then go into economizer mode
   1) Return Air Damper Closes
   2) Outside Air & Exhaust Air Dampers open fully
   3) Heatpipe bypass dampers (Supply & Return) open fully

6. Upon moving the selector switch to the off position or loss of the enable signal while in Auto mode, the following shall happen
   a. The supply fan and return fans shall stop.
   b. After a two minute delay:
      i. Outside air damper shall go normally closed
      ii. Exhaust air damper shall go normally closed
      iii. Return air damper shall go normally open
      iv. Exhaust air heat pipe bypass damper shall go normally closed
      v. Supply air heat pipe bypass damper shall go normally closed
7. A thermostat shall be provided in supply air discharge section. If the supply air discharge temperature is below 37 degrees Fahrenheit (adjustable), the thermostat shall close and shut the unit down to protect the heating coil downstream of the unit.
8. A set of contacts are provided for connection to a duct smoke detector (detector provided, installed and wired by others). Upon alarm, the unit shall shut down.

The following alarms shall be provided to protect the unit:

1. Return fan high differential pressure
2. Return fan VFD Fault
3. Supply fan VFD Fault
4. Supply fan high differential pressure
5. Supply air freeze protection

If any of the above go into alarm mode, the unit shall shut down and a general alarm dry contact shall be energized for the building management system to monitor.

Any of these alarms will require the unit to be powered down, then back on to be reset. The alarms will also need to be cleared through the HMI. An alarm log will be maintained through the HMI and PLC.

The following dry contacts shall be provided for monitoring through the building management system:

1. Return Fan Run
2. Supply Fan Run

NOTE: HEAT PIPE DRAIN OUTLET SHALL BE TRAPPED, HEAT TRACED, & INSULATED BY OTHERS.

A	OA HOOD w/ MIST ELIMINATORS
B	OA DAMPER (44"H x 66"W)
C	SA FILTER SECTION - SIDE LOADED
D	SA BYPASS DAMPER (12"H x 53"W)
E	HEAT PIPE (#HRM-6R - 60" x 108")
F	SUPPLY FAN w/ 10 HP MOTOR
G	RA FILTER SECTION - SIDE LOADED
H	RETURN FAN w/ 10 HP MOTOR
I	RECIRC DAMPER (60"H x 16"W)
J	EA BYPASS DAMPER (12"H x 53"W)
K	EA DAMPER (60"H x 24"W) w/ HOOD
L	(2) VFD - 10 HP EACH
M	(2) REMOVABLE PANELS (TYP)
N	(6) ACCESS DOORS (TYP)

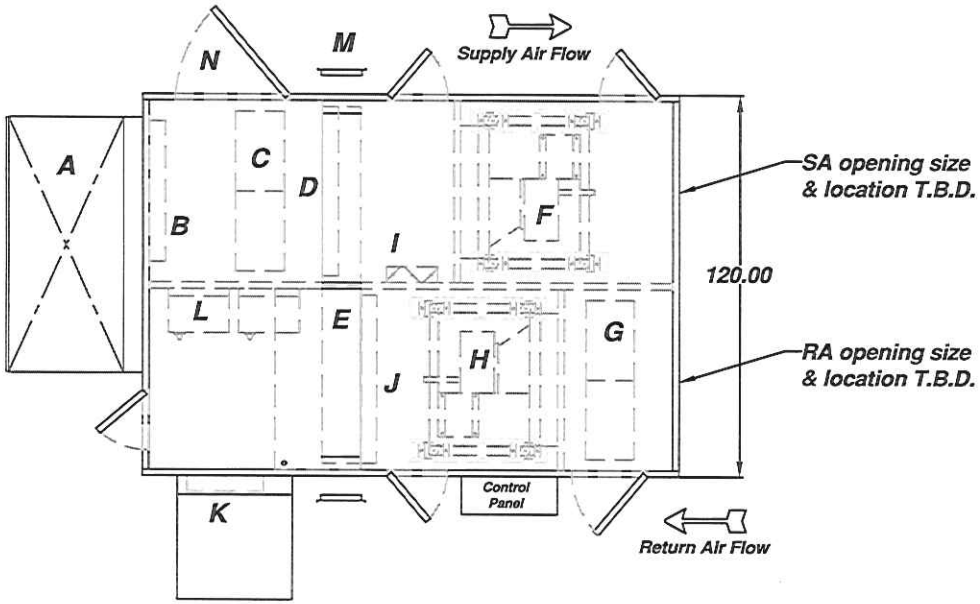

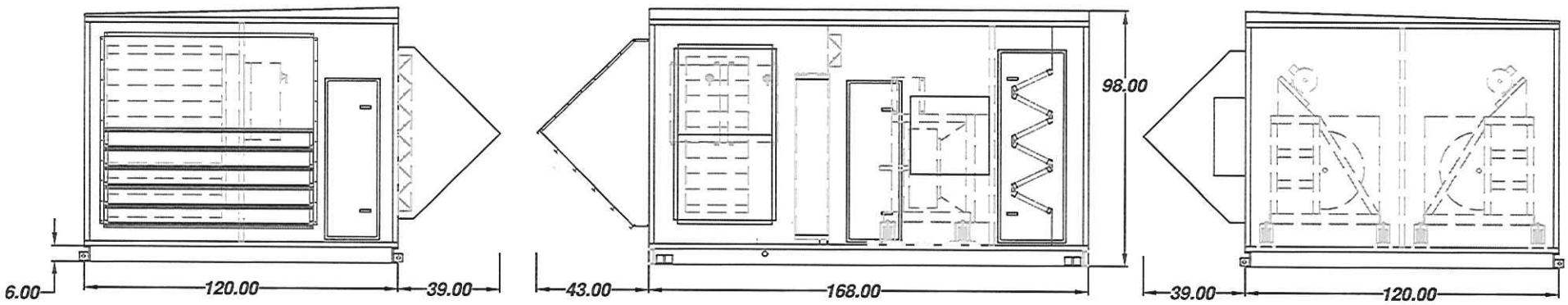

See Next Print for Left Side Elevation View

custom air solutions by Cambridgeport

CUSTOM AIR SOLUTIONS

AHU #	CFM	REVISION #	REVISON DATE
DH-1	13,500-SA / 14,000-RA	0	

THE INFORMATION CONTAINED IN THIS DOCUMENT IS PROPRIETARY TO CUSTOM AIR SOLUTIONS/CAS. THIS DOCUMENT MAY NOT BE ISSUED TO ANOTHER PARTY WITHOUT PRIOR WRITTEN CONSENT AND AUTHORIZATION. CUSTOM AIR SOLUTIONS & CAS LOGO ARE REGISTERED TRADEMARKS. ALL RIGHTS RESERVED.

DESCRIPTION	SUBMITTAL/UNIT LAYOUT DRAWING		
JOB NAME	DOVER POOL		
Q# or JOB#	Q-1885		
SCALE	NTS	DATE	12/15/09
DRAWN BY	CJR	PAGE	1 OF 2

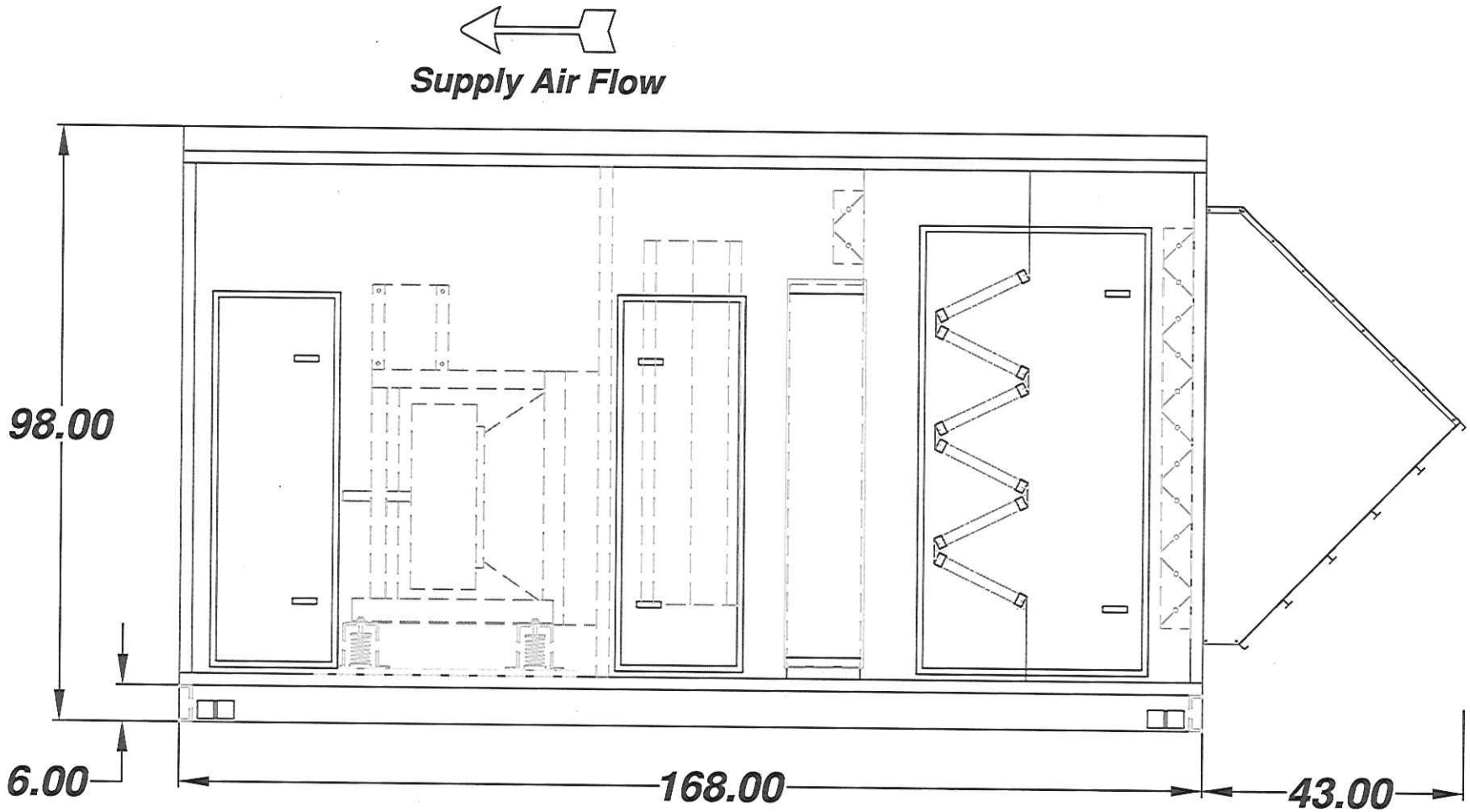

Left Side Elevation View

custom air solutions by Cambridgeport

CUSTOM AIR SOLUTIONS

AHU #	CFM	REVISION #	REVISON DATE
DH-1	13,500-SA / 14,000-RA	0	

DESCRIPTION	SUBMITTAL/UNIT LAYOUT DRAWING		
JOB NAME	DOVER POOL		
Q# or JOB#	Q-1885		
SCALE	NTS	DATE	12/15/09
DRAWN BY	CJR	PAGE	2 OF 2

THE INFORMATION CONTAINED IN THIS DOCUMENT IS PROPRIETARY TO CUSTOM AIR SOLUTIONS/CAS. THIS DOCUMENT MAY NOT BE ISSUED TO ANOTHER PARTY WITHOUT PRIOR WRITTEN CONSENT AND AUTHORIZATION. CUSTOM AIR SOLUTIONS & CAS LOGO ARE REGISTERED TRADEMARKS. ALL RIGHTS RESERVED.

GREENHECK
Building Value in Air.

Printed Date: 12/15/2009
Job: Q-1885 Dover Pool - Rev0
Product Type: Centrifugal
Mark: Supply Fan

QEP Plenum Fan

Tag Supply Fan

ENGINEERING DATA

Approx. Fan Weight (lb)	Class	Max. T Motor Frame Size	WR2 (lb-ft2)
445	II	284	42

**Weight does NOT include motor, drives, or accessories.

Motor Location
Top

Drive Type
Constant

STANDARD CONSTRUCTION FEATURES

HOUSING: Heavy gauge, steel mounting frame with die formed flanges and welded corners • Inlet panel is heavy gauge steel with die formed flanges and welded corners • Structural parts are phosphatized and coated with Permatector
BEARINGS, SHAFT, AND WHEEL: Heavy duty, self-aligning ball or roller pillow block bearings • Polished, solid steel shafts • Fully welded, aluminum centrifugal wheel • 12 bladed construction • Airfoil blade profile

CONFIGURATION

Arrangement	Rotation	Material Type	Fan Orientation
3	CW	Steel	Horizontal

SELECTED OPTIONS & ACCESSORIES

Bearings - L10 Extended Life, 200,000 hours
Guard - Belt, TE, Steel w/ Special Ctg.
Indoor Application, Industrial Epoxy Coating - Limestone, Entire Unit
Class F Motor Insulation
Drive Service Factor of 1.5 - Standard
VFD Rated Motor, Meets NEMA MG-1 Standard, S.F. is 1.0
Protective Cage, w/ Special Ctg.
Extended Lubrication Line Kit - Field Assembly

INSTALLATION

Connection	Plenum Discharge
N/A	N/A

NOTES:

Greenheck to provide:
- Motor grounding kit
- Kinetics# FHS-1 restrained isolators

MOTOR SPECS

Size (hp)	RPM	V/C/P	Enclosure	Frame Size
10	1725	208/60/3	TEFC	213

PERFORMANCE

(Elevation ft = 0, Airstream Temperature F = 70, Start Up Temperature F = 70) Drive Loss (%) 3

Qty	Model	Volume (CFM)	SP (in wg)	TS (ft/min)	OV (ft/min)	FRPM	Max Class FRPM	Operating Power (hp)	SE %
1	30-QEP-3-II	13,500	2.79	9,213	1,971	1,173	1,702	8.64	71

SOUND

Inlet / Outlet Sound Power by Octave Band								LwA	dBA
63	125	250	500	1000	2000	4000	8000		
79 / 83	87 / 89	92 / 95	81 / 89	78 / 86	75 / 80	70 / 75	67 / 71	86 / 91	75 / 80

LwA - A weighted sound power level, based on ANSI S1.4. dBA - A weighted sound pressure level, based on 11.5 dB attenuation per octave band at 5.0 ft.

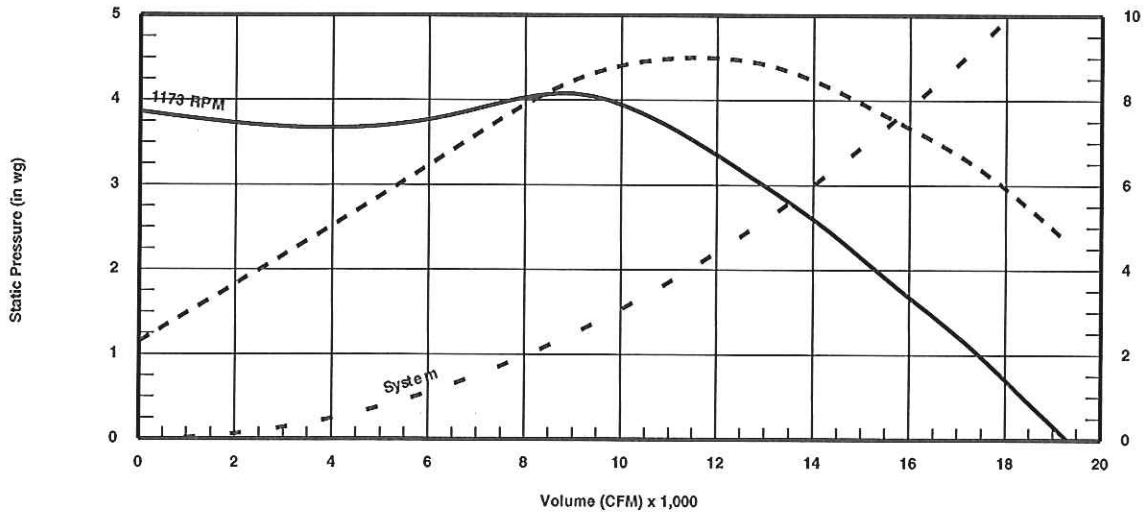

RPM Curve
System Curve
Brake Power Curve
Do not select to the left of this surge curve

GREENHECK
Building Value in Air.

Printed Date: 12/15/2009
Job: Q-1885 Dover Pool - Rev0
Product Type: Centrifugal
Mark: Supply Fan

Size: 30
Arrangement: 3
Class: II

QEP Plenum Fan

NOTES: All dimensions shown are in units of inches.
Drawings are not to scale. Drawings are of standard unit and do not include dimensions for accessories or design modifications.

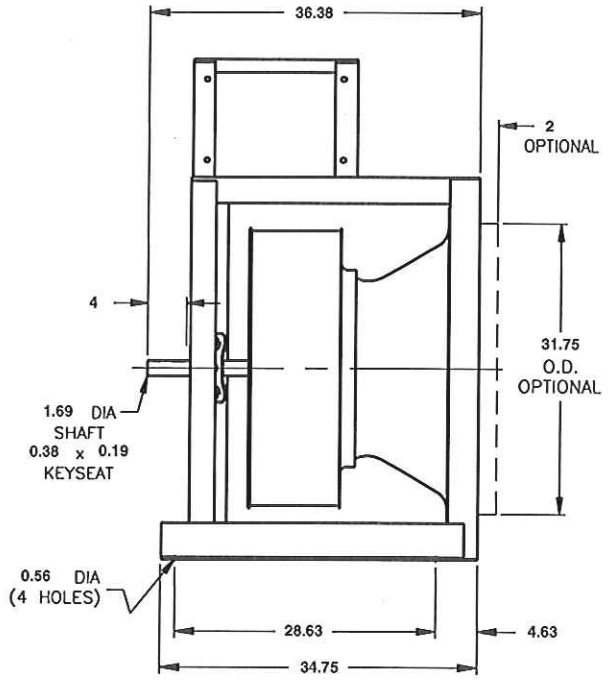

SIDE VIEW

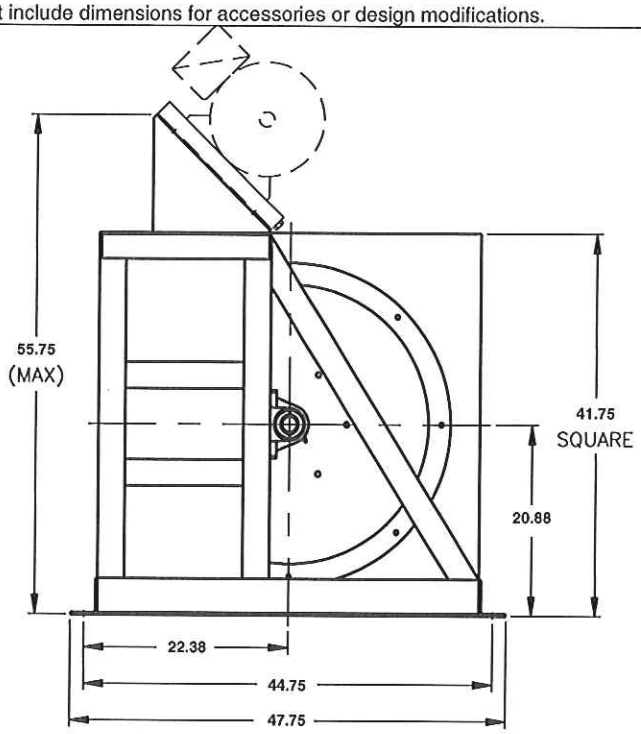

END VIEW

OUTLET

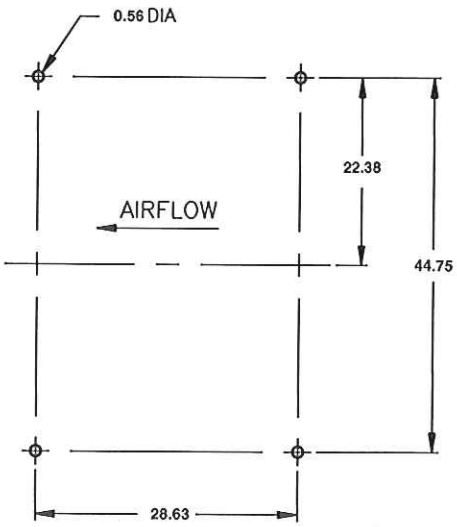

ATTENTION:
Accessories such as bases, isolators, motors, drives, and belt guards may ship unmounted and require field installation.

FOOTPRINT

FHS 1" DEFLECTION SEISMIC ISOLATOR

IP UNITS (INCHES AND POUNDS)

TYPE	L	W	T	A	D	E	H	Z
1-35/805	7.31	3.00	0.38	0.69	0.44	1.50	6.00	0.50
1-250/1000	9.53	5.00	0.38	0.88	0.81	2.50	7.56	0.63
1-1250/3500	9.53	5.00	0.38	0.88	0.81	2.50	7.56	0.63

STANDARD RATINGS		SPRING COIL					
		COLOR		FREE		RATED	
TYPE	SIZE	OUTER	INNER 1	HT.	O.D.	LOAD	DEFL.
FHS	1-35	BLUE		3.19	1.75	35	1.52
FHS	1-70	GREEN		3.19	1.75	70	1.36
FHS	1-120	GRAY		3.19	1.75	120	1.18
FHS	1-220	BROWN		3.19	1.75	220	1.07
FHS	1-370	ORANGE		3.19	1.75	370	0.96
FHS	1-500	BEIGE		3.19	1.75	500	1.00
FHS	1-600	CHROME		3.19	1.75	600	1.00
FHS	1-700	BEIGE	WHITE	3.19	1.75	700	1.00
FHS	1-805	CHROME	WHITE	3.19	1.75	805	1.01
FHS	1-250	BLUE		4.20	3.00	250	1.79
FHS	1-450	GREEN		4.20	3.00	450	1.54
FHS	1-625	BLACK		4.20	3.00	625	1.44
FHS	1-800	GRAY		4.20	3.00	800	1.31
FHS	1-1000	RED		4.20	3.00	1000	1.15
FHS	1-1250	BROWN		4.20	3.00	1250	1.09
FHS	1-1700	ORANGE		4.20	3.00	1700	0.95
FHS	1-2200	ORANGE	GRAY	4.20	3.00	2200	1.00
*FHS	1-2465	BLUE		4.20	3.00	2465	1.00
*FHS	1-2865	BLUE	GRAY	4.20	3.00	2865	1.00
*FHS	1-3500	BLUE	BROWN	4.20	3.00	3500	1.00

* INCLUDES WELDED GUSSET AS SHOWN

1-35/805 REQUIRES 0.38 DIA x 2.50 MIN EMBED ANCHORS IN CONCRETE
1-250/3500 REQUIRES 0.75 DIA x 4.75 MIN EMBED ANCHORS IN CONCRETE
(ALLOWABLE LOADS BASED ON 3000 PSI MIN CONCRETE)
1-35/805 ANCHOR BOLT TORQUE - 20 FT-LBS, PULL TEST - 1210 LBS
1-250/3500 ANCHOR BOLT TORQUE - 150 FT-LBS, PULL TEST - 3625 LBS

SPECIFICATIONS:

- VERTICALLY AND LATERALLY RESTRAINED SPRING ISOLATOR WITH CONSTANT FREE AND OPERATING HEIGHT AND REPLACEABLE NEOPRENE SNUBBING ELEMENTS.
- 6mm NOMINAL CLEARANCE IN SNUBBING ELEMENTS.
- MINIMUM OVERLOAD OF 50%.
- MINIMUM Kx/Ky RATIO OF 1.0.
- ALL ELEMENTS SAFE AT SOLID LOADING.
- POWDER COATED COILS AND HOT DIPPED GALVANIZED BRACKET
- OSHPD APPROVAL NUMBER R-0433

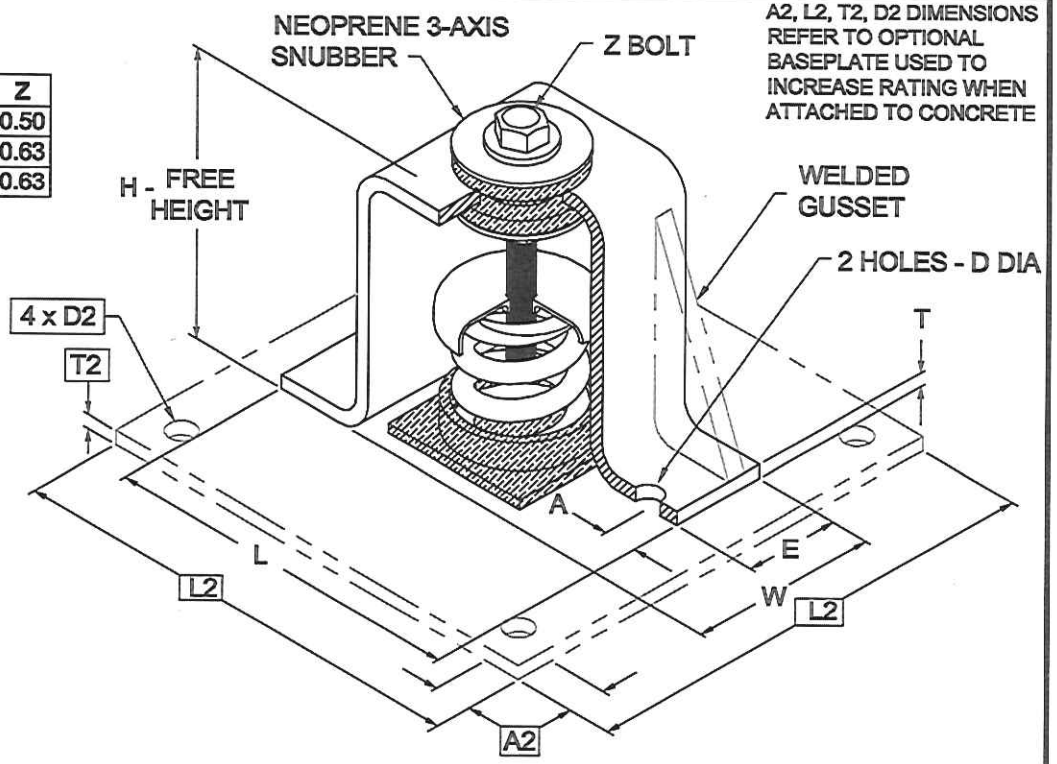

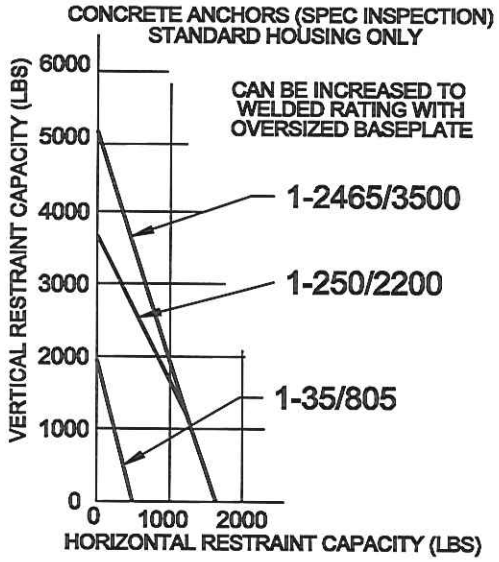

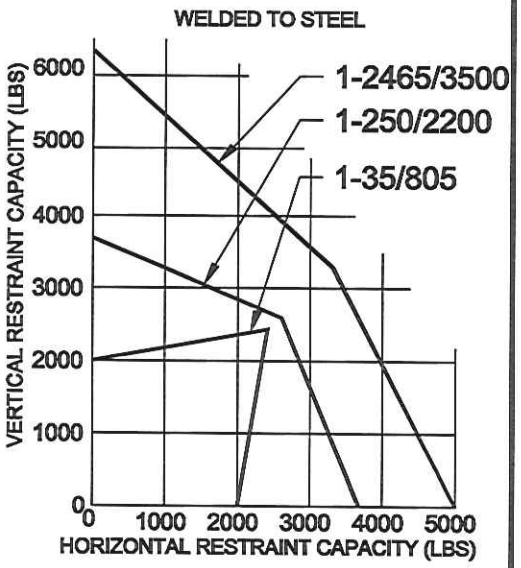

Computed horiz and vert seismic load combinations must fall within the restraint capacity envelope. Contact KNC for bolted to steel data.

KINETICS Noise Control

Member VISCMA

KINETICS NOISE CONTROL, INC
6300 IRELAN PL,
DUBLIN, OH 43017 USA
Ph: 614 889-0480, Fax: 614 889-0540
www.kineticsnoise.com

Model:	By: PWM	Drawing No:
FHS-1	Date: 10/24/01	S-01.35-11
	Revised: 01/20/04 / JJ	

AMCA

AMCA Licensed for Sound and Air Performance. Power (BHP/kW) excludes drives.

Greenheck Fan Corporation certifies that the model shown herein is licensed to bear the AMCA Seal. The ratings shown are based on tests and procedures performed in acccordance with AMCA Publication 211 and AMCA Publication 311 and comply with the requirements of the AMCA Certified Ratings Program. Performance certified is for installation type A - free inlet, free outlet. Performance ratings do not include the effects of appurtenances (accessories) in the airstream. Power ratings (BHP/kW) do not include transmission losses. The sound power level ratings shown are in decibels, referred to 10-12 watts calculated per AMCA Standard 301. Values shown are for inlet Lwi, LwiA, and outlet Lwo, LwoA sound power levels for installation type A: free inlet, free outlet. Outlet ratings include the effects of free end correction.

GREENHECK
Building Value in Air.

Printed Date: 12/15/2009
Job: Q-1885 Dover Pool - Rev0
Product Type: Centrifugal
Mark: Return Fan

QEP Plenum Fan

Tag Return Fan

ENGINEERING DATA

Approx. Fan Weight (lb)	Class	Max. T Motor Frame Size	WR2 (lb-ft2)
445	II	284	42

**Weight does NOT include motor, drives, or accessories.

Motor Location
Top

Drive Type
Constant

STANDARD CONSTRUCTION FEATURES

HOUSING: Heavy gauge, steel mounting frame with die formed flanges and welded corners • Inlet panel is heavy gauge steel with die formed flanges and welded corners • Structural parts are phosphatized and coated with Permatector
BEARINGS, SHAFT, AND WHEEL: Heavy duty, self-aligning ball or roller pillow block bearings • Polished, solid steel shafts • Fully welded, aluminum centrifugal wheel • 12 bladed construction • Airfoil blade profile

CONFIGURATION

Arrangement	Rotation	Material Type	Fan Orientation
3	CW	Steel	Horizontal

SELECTED OPTIONS & ACCESSORIES

Bearings - L10 Extended Life, 200,000 hours
Guard - Belt, TE, Steel w/ Special Ctg.
Indoor Application, Industrial Epoxy Coating - Limestone, Entire Unit
Class F Motor Insulation
Drive Service Factor of 1.5 - Standard
VFD Rated Motor, Meets NEMA MG-1 Standard, S.F. is 1.0
Protective Cage, w/ Special Ctg.
High Efficiency Motor

INSTALLATION

Connection	Plenum Discharge
N/A	N/A

NOTES:

Greenheck to provide:
- Motor grounding kit
- Kinetics# FHS-1 restrained isolators

MOTOR SPECS

Size (hp)	RPM	V/C/P	Enclosure	Frame Size
10	1725	208/60/3	TEFC	254

PERFORMANCE

(Elevation ft = 0, Airstream Temperature F = 70, Start Up Temperature F = 70) Drive Loss (%) 3

Qty	Model	Volume (CFM)	SP (in wg)	TS (ft/min)	OV (ft/min)	FRPM	Max Class FRPM	Operating Power (hp)	SE %
1	30-QEP-3-II	14,000	2.98	9,535	2,044	1,214	1,702	9.58	71

SOUND

Inlet / Outlet Sound Power by Octave Band								LwA	dBA
63	125	250	500	1000	2000	4000	8000		
80 / 84	87 / 90	93 / 95	83 / 90	78 / 86	75 / 81	71 / 76	68 / 72	86 / 92	75 / 81

LwA - A weighted sound power level, based on ANSI S1.4. dBA - A weighted sound pressure level, based on 11.5 dB attenuation per octave band at 5.0 ft.

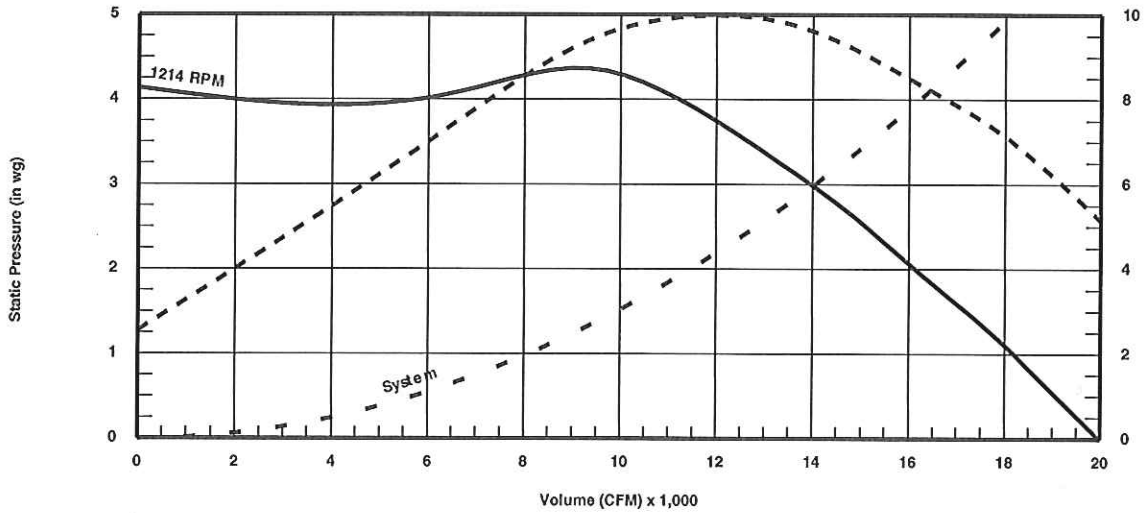

RPM Curve
System Curve
Brake Power Curve
Do not select to the left of this surge curve

GREENHECK
Building Value in Air.

Printed Date: 12/15/2009
Job: Q-1885 Dover Pool - Rev0
Product Type: Centrifugal
Mark: Return Fan

Size: 30
Arrangement: 3
Class: II

QEP Plenum Fan

NOTES: All dimensions shown are in units of inches.
Drawings are not to scale. Drawings are of standard unit and do not include dimensions for accessories or design modifications.

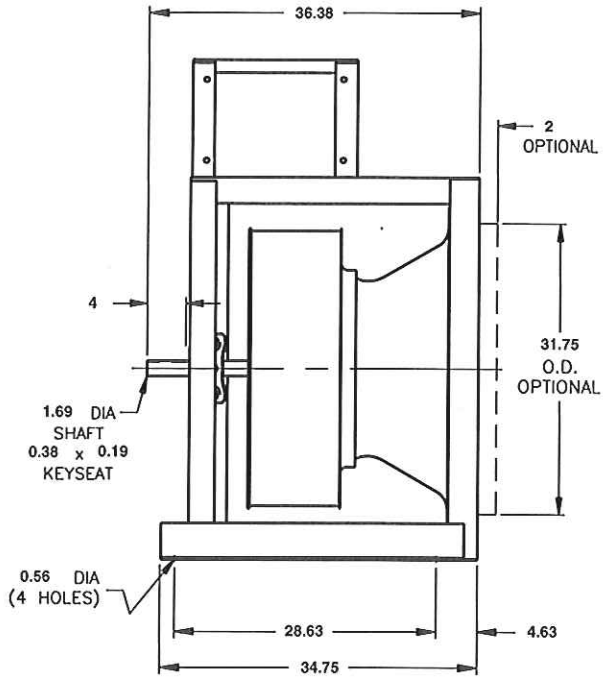

SIDE VIEW

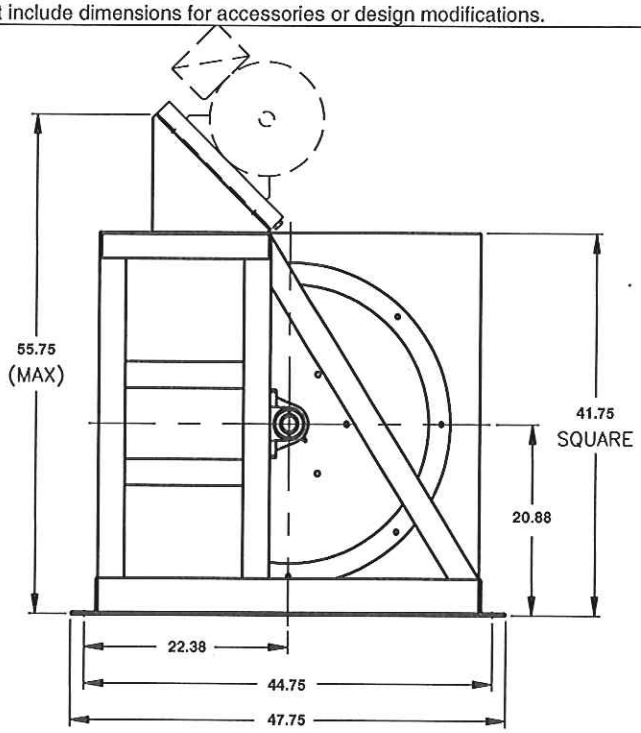

END VIEW

OUTLET

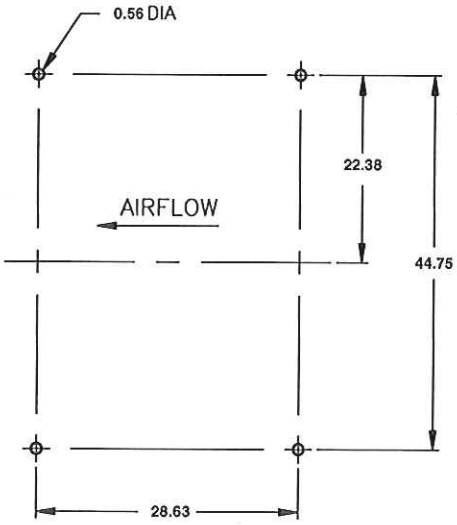

ATTENTION:
Accessories such as bases, isolators, motors, drives, and belt guards may ship unmounted and require field installation.

FOOTPRINT

FHS 1" DEFLECTION SEISMIC ISOLATOR

IP UNITS (INCHES AND POUNDS)

TYPE	L	W	T	A	D	E	H	Z
1-35/805	7.31	3.00	0.38	0.69	0.44	1.50	6.00	0.50
1-250/1000	9.53	5.00	0.38	0.88	0.81	2.50	7.56	0.63
1-1250/3500	9.53	5.00	0.38	0.88	0.81	2.50	7.56	0.63

STANDARD RATINGS		SPRING COIL					
		COLOR		FREE		RATED	
TYPE	SIZE	OUTER	INNER 1	HT.	O.D.	LOAD	DEFL.
FHS	1-35	BLUE		3.19	1.75	35	1.52
FHS	1-70	GREEN		3.19	1.75	70	1.36
FHS	1-120	GRAY		3.19	1.75	120	1.18
FHS	1-220	BROWN		3.19	1.75	220	1.07
FHS	1-370	ORANGE		3.19	1.75	370	0.96
FHS	1-500	BEIGE		3.19	1.75	500	1.00
FHS	1-600	CHROME		3.19	1.75	600	1.00
FHS	1-700	BEIGE	WHITE	3.19	1.75	700	1.00
FHS	1-805	CHROME	WHITE	3.19	1.75	805	1.01
FHS	1-250	BLUE		4.20	3.00	250	1.79
FHS	1-450	GREEN		4.20	3.00	450	1.54
FHS	1-625	BLACK		4.20	3.00	625	1.44
FHS	1-800	GRAY		4.20	3.00	800	1.31
FHS	1-1000	RED		4.20	3.00	1000	1.15
FHS	1-1250	BROWN		4.20	3.00	1250	1.09
FHS	1-1700	ORANGE		4.20	3.00	1700	0.95
FHS	1-2200	ORANGE	GRAY	4.20	3.00	2200	1.00
*FHS	1-2465	BLUE		4.20	3.00	2465	1.00
*FHS	1-2865	BLUE	GRAY	4.20	3.00	2865	1.00
*FHS	1-3500	BLUE	BROWN	4.20	3.00	3500	1.00

* INCLUDES WELDED GUSSET AS SHOWN

1-35/805 REQUIRES 0.38 DIA x 2.50 MIN EMBED ANCHORS IN CONCRETE
1-250/3500 REQUIRES 0.75 DIA x 4.75 MIN EMBED ANCHORS IN CONCRETE
(ALLOWABLE LOADS BASED ON 3000 PSI MIN CONCRETE)
1-35/805 ANCHOR BOLT TORQUE - 20 FT-LBS, PULL TEST - 1210 LBS
1-250/3500 ANCHOR BOLT TORQUE - 150 FT-LBS, PULL TEST - 3625 LBS

SPECIFICATIONS:

- VERTICALLY AND LATERALLY RESTRAINED SPRING ISOLATOR WITH CONSTANT FREE AND OPERATING HEIGHT AND REPLACEABLE NEOPRENE SNUBBING ELEMENTS.
- 6mm NOMINAL CLEARANCE IN SNUBBING ELEMENTS.
- MINIMUM OVERLOAD OF 50%.
- MINIMUM Kx/Ky RATIO OF 1.0.
- ALL ELEMENTS SAFE AT SOLID LOADING.
- POWDER COATED COILS AND HOT DIPPED GALVANIZED BRACKET
- OSHPD APPROVAL NUMBER R-0433

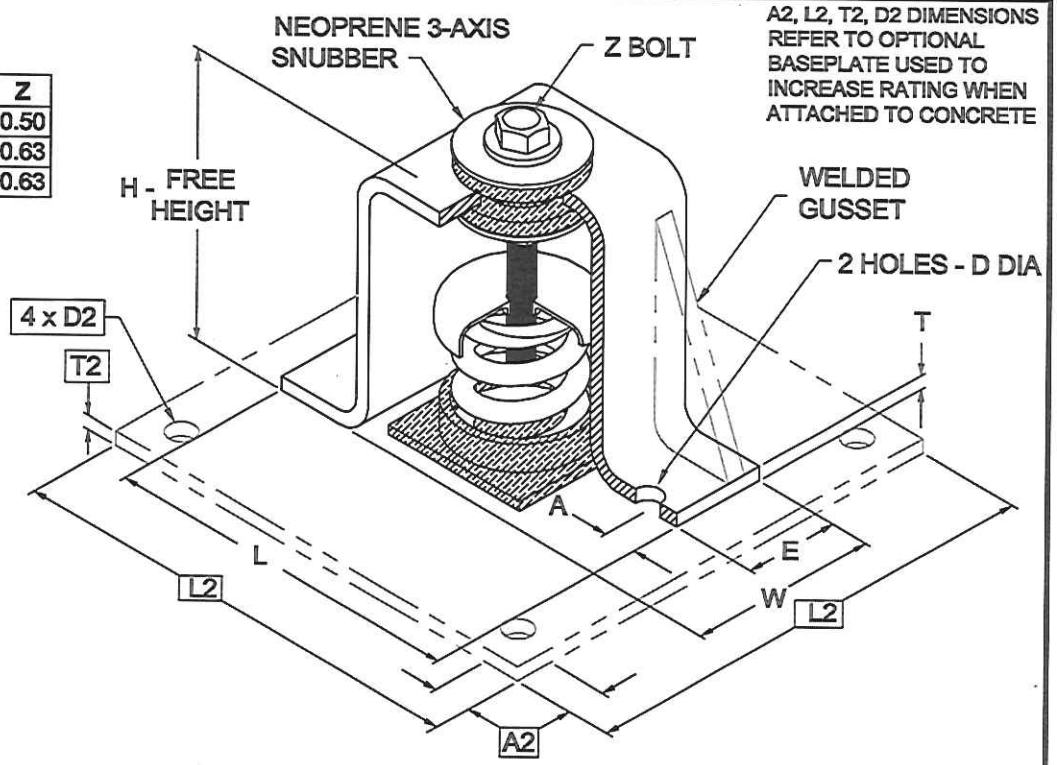

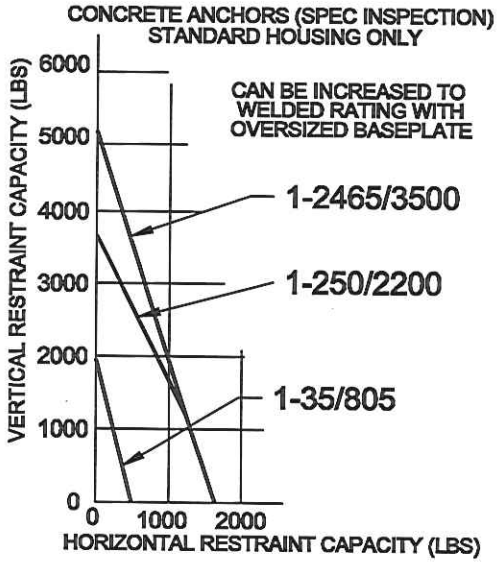

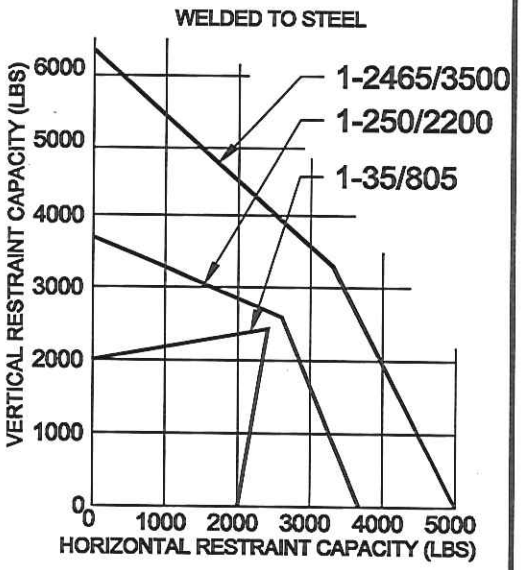

Computed horiz and vert seismic load combinations must fall within the restraint capacity envelope. Contact KNC for bolted to steel data.

KINETICS Noise Control	Member VISCMA	KINETICS NOISE CONTROL, INC 6300 IRELAN PL, DUBLIN, OH 43017 USA Ph: 614 889-0480, Fax: 614 889-0540 www.kineticsnoise.com	Model: FHS-1	By: PWM Date: 10/24/01 Revised: 01/20/04 / JJ	Drawing No: S-01.35-11

GREENHECK
Building Value in Air.

Printed Date: 12/15/2009
Job: Q-1885 Dover Pool - Rev0
Product Type: Centrifugal
Mark: Return Fan

AMCA

AMCA Licensed for Sound and Air Performance. Power (BHP/kW) excludes drives.

Greenheck Fan Corporation certifies that the model shown herein is licensed to bear the AMCA Seal. The ratings shown are based on tests and procedures performed in acccordance with AMCA Publication 211 and AMCA Publication 311 and comply with the requirements of the AMCA Certified Ratings Program. Performance certified is for installation type A - free inlet, free outlet. Performance ratings do not include the effects of appurtenances (accessories) in the airstream. Power ratings (BHP/kW) do not include transmission losses. The sound power level ratings shown are in decibels, referred to 10-12 watts calculated per AMCA Standard 301. Values shown are for inlet Lwi, LwiA, and outlet Lwo, LwoA sound power levels for installation type A: free inlet, free outlet. Outlet ratings include the effects of free end correction.

Description
1/2-500HP
E7/3-Contactor Bypass

E7B

The E7/Bypass package is a 3-contactor style bypass, allowing motor operation from either the drive or across the line. This facilitates drive maintenance while the motor continues to operate. The E7 and E7/Bypass have been designed for flexibility in providing the features and options commonly specified by facility designers.

The E7 Drive is a variable torque AC drive, designed specifically for HVAC applications in building automation. A new benchmark for size, cost, performance, benefits, and quality, the E7 includes numerous built-in features such as Network Communications, H/O/A, PI control and energy savings functions.

The E7 has embedded communications for the popular building automation protocols, Johnson Controls Metasys N2 and Siemens APOGEE FLN, as well as Modbus. An optional LonWorks and EtherNet/IP interface card is available.

Image Displayed with Motor Control Option **(0)**, 22 mm LEDs and Switches

Bypass Features

- Input, output, and bypass contactors
- Circuit breaker disconnect (MCP), with interlocked, through-the-door operating mechanism
- Thermal motor overload relay, class 20
- 115 VAC control transformer, fused
- Drive/Bypass selector
- Hand/Off/Auto selector
- Normal/Test selector
- LED's, for Control: Power, Drive Run, Drive Fault, Bypass Run, Motor OL/Safety Fault and Smoke Purge
- Selectable auto transfer to bypass on drive fault
- Selectable remote transfer to bypass via contact closure
- Selectable smoke purge function
- Run mode and Fault contacts
- Control and safety circuit terminal strip
- Damper circuit safety interlock

Bypass Options

- NEMA 12 FVFF enclosure
- 22mm LEDs & switches
- Twelve-pulse rectification with input transformer: 25 -150 HP, 208 VAC; 30-150 HP, 230/240 VAC; 40-500 HP, 480 VAC
- LCD display: 5 lines, 16 characters each
- Communication: LonWorks and EtherNet/IP
- RFI/EMI filter
- Pressure/electrical transducer
- Multiple motor operation logic:
  2 Motor "OR"
  2 Motor "AND"
- Speed potentiometer
- Engraved nameplates
- DriveWizard upload/download and monitoring/graphing software
- Drive input fusing
- 4-20mA output, 2 programmable
- Output impedance
- Input impedance

Service Conditions

- Ambient Temperature:
  -10°C to 40°C(14°F to 104°F) NEMA 1
- Humidity: 95% RH, non-condensing
- Altitude: 3300 ft; higher by derate
- Input voltage: +10%/-15%
- Input frequency: 50/60 Hz ± 5%
- 3-phase, 3-wire, phase sequence insensitive

Performance Features

- VT Ratings: 1/2-150 HP, 208 VAC
  1/2-150 HP, 230/240 VAC
  1/2- 500 HP, 480 VAC
- Overload capacity: 110% for 60 sec. (150% peak)
- Starting torque: 100% at 3 Hz
- DC injection braking: at start or stop, adjustable, current limited (anti-windmilling)
- Motor preheat function
- Adjustable accel/decel: 0.1 to 6000 sec.
- Controlled speed range: 40:1
- Critical frequency rejection: 3 selectable, adjustable bands
- Torque limiting: 30-180%
- Energy $aving control
- Torque boost: full range, auto
- Power loss ride-thru: 2 sec.
- Inertia ride-thru
- Auto restart after power loss or resettable fault, selectable, programmable
- Feedback signal loss detection
- Serial communications loss detection
- "Up/Down" floating point control capability
- Stationary motor auto-tuning
- Customizable monitor display
- Sleep function
- Run permissive input
- Ramp-to-stop or coast-to-stop selection
- Runtime changes in control and display
- Project-specific parameter reinitialization

Protective Features

- Current limited stall prevention
- Heat sink over-temperature, speed fold-back
- Cooling fan operating hours recorded
- Bi-directional start into rotating motor at synchronized speed
- DC bus charge indicator
- Current limiting DC bus fuse
- Optically-Isolated controls
- Short circuit protection: Phase-phase and phase-neutral
- Ground fault protection
- Short circuit withstand rating: 65K RMS, 100K RMS with bus reactor
- Electronic motor overload: UL
- Current and torque limit
- Fault display: last 10 faults
- Fault circuit: OC, OV, OT
- Over torque and under torque protection
- Program security code
- "Hunting" prevention logic
- Reverse prohibit selectability

Design Features

- 32-bit microprocessor logic
- Flash upgradeable firmware
- Non-volatile memory, program retention
- Surface-mount devices
- Displacement power factor: 0.98
- Output frequency: 0.1 to 120 Hz
- Frequency resolution: 0.06 Hz
- Frequency regulation: 0.1%
- Control Terminal Board: Quick disconnect, removable
- Carrier frequency: selectable to 15 kHz
- 3% DC bus reactor: 30-150 HP, 208 VAC; 30-150 HP, 240 VAC; 40-500 HP, 480 VAC; optional on lower ratings
- Keypad Operator: Hand/Off/Auto, built-in copy feature, 7 languages
- 24 VDC control logic
- Transmitter/Option power supply
- Output contacts: One form C and two programmable form A
- Input/output terminal status
- Input terminals: 5 programmable multi-function input terminals
- Fault input: Programmable
- Diagnostic fault indication in selected language
- Timer function: Elapsed time, Delay on start, Delay on stop
- RS-422/485 port: Embedded Metasys N2, APOGEE FLN, and Modbus
- Volts/hertz ratio: Preset and programmable V/Hz patterns
- Multi-speed settings: 5 available
- Remote speed command: 0-10 VDC or 4-20 mA, direct or reverse-acting
- Setpoint (PI) control with inverse or square root input, differential control via two feedback capability
- Feedback signal: low pass filter
- Speed command: bias and gain
- Analog outputs: Programmable, two, 0-10 VDC
- Meter Functions: Volt, amp, kilowatt, elapsed run time, speed command
- Output Current Transformers, qty 3
- NEMA 1 or NEMA 12 enclosure
- UL, cUL listed; CE marked; IEC 146
- MTBF: exceeds 28 years

CA.E7.01, 11/01/06
Data subject to change without notice
Yaskawa Electric America

E7B

Description

1/2-500HP
E7/3-Contactor Bypass

Model Number Configuration & Pricing:

Step 1. First complete the Base Number for the required enclosure type, voltage and current rating.

Step 2. Add the Option code letter for each required option. If an option is not wanted, no character is inserted.

Step 3. Find the list price for the Base Number selected from the following pages. Add the list price of each selected option to this base price.

Example: E7 NEMA 1 Bypass package **(E7BV)** with a 96 Amp, 480V drive **(B096)**, with 22mm LEDs & switches **(0)**, a 3% input reactor **(R)**, door-mounted speed pot **(S)**, and LonWorks communications capability **(L)**, would be **E7BVB096RSL**.
Pricing would be $7330 for the Base Number, plus $465 for the reactor, $60 for the speed pot, and $390 for the LonWorks card, for a total of $8245 list.

E7BVB096RSL

BASE NUMBER	OPTIONS
E 7 B _ _ _	_ _ _ _ _ _ _ _ _ _

E7 3-Contactor Bypass

Enclosure	
V	NEMA 1
B	NEMA 12

Voltage	
D	208V
A	230/240V
B	480V

Current
NEC Rated Amps (Ex.: "096" = 96A)

Motor Control	
T	Touchpad & LED
Y	Touchpad & LCD
0	22mm Operators & LCD
D	2 Motor "OR" (4)
A	2 Motor "AND" (4)

Input Filter	
0	None (leave blank)
N	Cap Filter
E	RFI Filter

Input Fuses	
0	None (leave blank)
F	Fuses

Communications (3)	
0	Not Enabled (leave blank)
2	EtherNet/IP
L	LonWorks
J	Enable METASYS N2
U	Enable APOGEE FLN
V	Enable Modbus

4-20mA Output	
0	None (leave blank)
M	4-20 mA Output (5)

3-15 PSI Transducer (3)	
0	None (leave blank)
P	3-15 PSI Transducer

Speed Pot (3)	
0	None (leave blank)
S	Speed Pot (5)

Custom Nameplates	
0	None (leave blank)
W	Custom Nameplates

Load Reactor	
0	None (leave blank)
K	5% Load Reactor

Line Impedance	
0	None (leave blank)
X	3% Bus Reactor (1)
Z	5% Bus Reactor (1)
R	3% Input Reactor (2)

(1) 3% and 5% Bus Reactors are only available as an option on base numbers up to E7B_D074, A068, and I B040; larger drives have a Bus Reactor as standard.

(2) 3% Input Reactor, when combined with the standard Bus Reactor (available on base numbers E7B_D088, A080, and B052 and above), yields a total of 5% input impedance.

(3) Serial Comm options (J), (L), (U) or (V) cannot be ordered if both (S) and (P) are combined.

(4) 2 Motor "OR" and 2 Motor "AND" options (D) and (A) are only available with 22mm operators option (0).

(5) Options (M) and (S) are not available with options (T) or (Y) - 4-20mA output is standard with options (T) or (Y).

Bypass Option Descriptions:

(V, B) Enclosure: The drive and options are provided in either a NEMA Type 1 (V) ventilated or NEMA Type 12 FVFF (force ventilated fan filter) (B) enclosure, large enough to accommodate any or all of the package options. Enclosures for Base Numbers up to, and including, D114 (40HP, 208V), A104 (40HP, 240V),and B124 (100HP, 480V) are wall-mounted; larger drives are in floor-mount enclosures.

(T, Y, 0, D, A) Motor Control: The best-priced configuration, option (T) is for single motor operation with H/O/A Touchpad Control and an LED Drive Keypad. The (Y) option replaces the LED Drive Keypad with a backlit 5-line LCD Keypad Display. For purposes of continuity with previous sales - if no Motor Control option is indicated, the standard configuration option (0) provides 22mm LEDs & Switches and the LCD Drive Keypad Display. Either one of two motors can be controlled with the 'OR' configuration, option (D). Simultaneous control of two identical motors is possible with the 'AND' configuration, option (A). Both options (A) & (D) are only available with the 22mm LEDs & Switches.

(N, E) Input Filter: The standard configuration does not include a filter. The cap filter, option (N), is a delta-wye capacitive network, while the RFI filter (E) provides noise attenuation to help meet CE requirements. This option requires the addition of the add-on box - see Dimensions and Data.

(F) Input Fuses: The standard configuration, option (0), includes a circuit breaker disconnect with a door-interlocked operating mechanism. Option (F) provides high-speed semi-conductor drive input fuses, rated for 200,000 amp RMS symmetrical interrupting capacity.

(X, Z, R) Line Impedance: Drives above Base Numbers D074 (25HP, 208V), A068 (25HP, 240V) and B040 (30HP, 480V) include a 3% DC bus reactor in the standard package and do not provide any additional impedance. Option (X), 3% impedance, and option (Z), 5% impedance, are not available for ratings larger than these. To achieve a 5% total input impedance, select option (R) - this 3% input reactor is available only for the HP ratings greater than the HP's listed above, and combines with the drive's standard DC bus reactor. If this option is combined with a drive that includes a bus reactor, the add-on box is required - see Dimensions and Data.

(K) Load Reactor: No form of output impedance is normally required. A 5% load reactor, option (K), is available if additional output impedance is desired (usually for long lead-lengths or noise reduction). This option may require the add-on box for wall-mount enclosures - see Dimensions and Data.

(W) Custom Nameplates: Custom engraved nameplates with white lettering on black lamicoid are available with option (W), for special tagging purposes (Example: "AHU #1"). Note that this option requires the text to be specified by the customer. Leave this field blank if no special nameplates are required.

(S) Speed Pot: The drive's digital operator is always brought out to the front of the panel, so it is available for speed control - this is the standard configuration. A door-mounted 2.5K ohm speed potentiometer is available for manual speed control with option (S). This also includes a 2.5K ohm trim pot and is suitable for NEMA 1 and NEMA 12 installations.

(P) 3-15 PSI Transducer: No transducer is provided with the standard configuration. To add an optional transducer that accepts a 3-15 PSI pneumatic signal and converts it to a 4-20mA signal that is sent to the drive, specify option (P).

(M) 4-20mA Output: The standard Configured package provides two programmable 0-10VDC outputs. To convert these outputs to 4-20mA output signals, specify option (M).

(2, L, J, U, V) Communications: All configurations provide the hardware and software required for Metasys N2, Siemens Apogee, and Modbus network communications, but these protocols are not enabled in the standard configuration. Options (J), (U), and (V) provide the programming and jumpers necessary to enable these protocols, at no additional cost. Lonworks option (L) and EtherNet/IP option (2) require the addition of an optional board.

Dimensions and Data

Rated Input Voltage	Bypass E7BV or E7BB	Rated Output Current (Amps)	Nominal HP (1)	Physical Dimensions (in.)(5) H	W	D(4)	Weight (lbs.)(2)	Dimension Drawing Number(6)	Dimension Drawing Number (w/ Add-on Box) (3), (6)
208V	D002	2.4	1/2	29.48(3)	19.06	13.66	115	DD.AFD.087.01	DD.AFD.087.01.AC
	D003	3.5	3/4						
	D004	4.6	1						
	D007	7.5	2						
	D010	10.6	3						
	D016	16.7	5						
	D024	24.2	7.5						
	D030	30.8	10				127		
	D046	46.2	15						
	D059	59.4	20	40.48(3)	25.63	14.66	208	DD.AFD.088.01	DD.AFD.088.01.AC
	D074	74.8	25						
	D088	88.0	30				221		
	D114	114	40						
	D143	143	50	84.00	37.75(5)	26.00	847	DD.AFD.091.01	N/A
	D169	169	60				943		
	D211	211	75						
	D273	273	100				1214		
	D343	343	125				1330	TBD	
	D396	396	150				1423		
240V	A002	2.2	1/2	29.48(3)	19.06	13.66	115	DD.AFD.087.01	DD.AFD.087.01.AC
	A003	3.2	3/4						
	A004	4.0	1						
	A006	6.8	2						
	A009	9.6	3						
	A015	15.2	5						
	A022	22.0	7.5						
	A028	28.0	10				127		
	A042	42.0	15						
	A054	54.0	20	40.48(3)	25.63	14.66	208	DD.AFD.088.01	DD.AFD.088.01.AC
	A068	68.0	25						
	A080	80.0	30				221		
	A104	104	40						
230V	A130	130	50	84.00	37.75(5)	26.00	847	DD.AFD.091.01	N/A
	A154	154	60				943		
	A192	192	75						
	A248	248	100				1214		
	A312	312	125				1330	TBD	
	A360	360	150				1376		

(1) Horsepower rating is based on standard NEMA B 4-pole motor design as represented in NEC table 430.150 Full-Load Current, Three-Phase Alternating Current Motors

(2) Data represents the total approx. weight of the drive with all possible standard options, not shipping weight.

(3) Add-on box (required with specified options - see options description) adds up to 15" to 'H' dimension and 91 lbs. Max. to total drive weight.

(4) Add 2.37" for circuit breaker handle to depth.

(5) Some option combinations require the next size enclosure. Consult factory before providing mechanical submittal data.

(6) Operator Drawing Number, Options 0, D, A: DO.E7B.01
Operator Drawing Number, Option T: DO.E7B.02
Operator Drawing Number, Option Y: DO.E7B.03

Rated Input Voltage	Bypass E7BV or E7BB	Rated Output Current (Amps)	Nominal HP (1)	Physical Dimensions (in.)(5) H	W	D(4)	Weight (lbs.)(2)	Dimension Drawing Number(6)	Dimension Drawing Number (w/ Add-on Box) (3), (6)
480V	B001	1.1	1/2	29.48(3)	19.06	13.66	115	DD.AFD.087.01	DD.AFD.087.01.AO
		1.6	3/4						
	B002	2.1	1						
	B003	3.4	2						
	B004	4.8	3						
	B007	7.6	5						
	B011	11.0	7.5						
	B014	14.0	10				127		
	B021	21.0	15						
	B027	27.0	20				142		
	B034	34.0	25						
	B040	40.0	30						
	B052	52.0	40	40.48(3)	25.63	14.66	203	DD.AFD.088.01	DD.AFD.088.01.AO
	B065	65.0	50				232		
	B077	77.0	60						
	B096	96.0	75				241		
	B124	124	100						
	B156	156	125	84.00	37.75(5)	26.00	943	DD.AFD.091.01	N/A
	B180	180	150						
	B240	240	200				1240		
	B302	302	250				1352		
	B380	380	300	84.00	TBD	26.00	TBD	DD.AFD.095.01	TBD
	B414	414	350				TBD		
	B477	477	400	84.00	TBD	26.00	TBD	TBD	TBD
	B515	515	450				TBD		
	B590	590	500				TBD		

(1) Horsepower rating is based on standard NEMA B 4-pole motor design as represented in NEC table 430.150 Full-Load Current, Three-Phase Alternating Current Motors

(2) Data represents the total approx. weight of the drive with all possible standard options, not shipping weight.

(3) Add-on box (required with specified options - see options description) adds up to 15" to 'H' dimension and 91 lbs. Max. to total drive weight.

(4) Add 2.37" for circuit breaker handle to depth.

(5) Some option combinations require the next size enclosure. Consult factory before providing mechanical submittal data.

(6) Operator Drawing Number, Options 0, D, A: DO.E7B.01
Operator Drawing Number, Option T: DO.E7B.02
Operator Drawing Number, Option Y: DO.E7B.03

E7B Dimension Drawing

DD.AFD.087.01

E7/Bypass

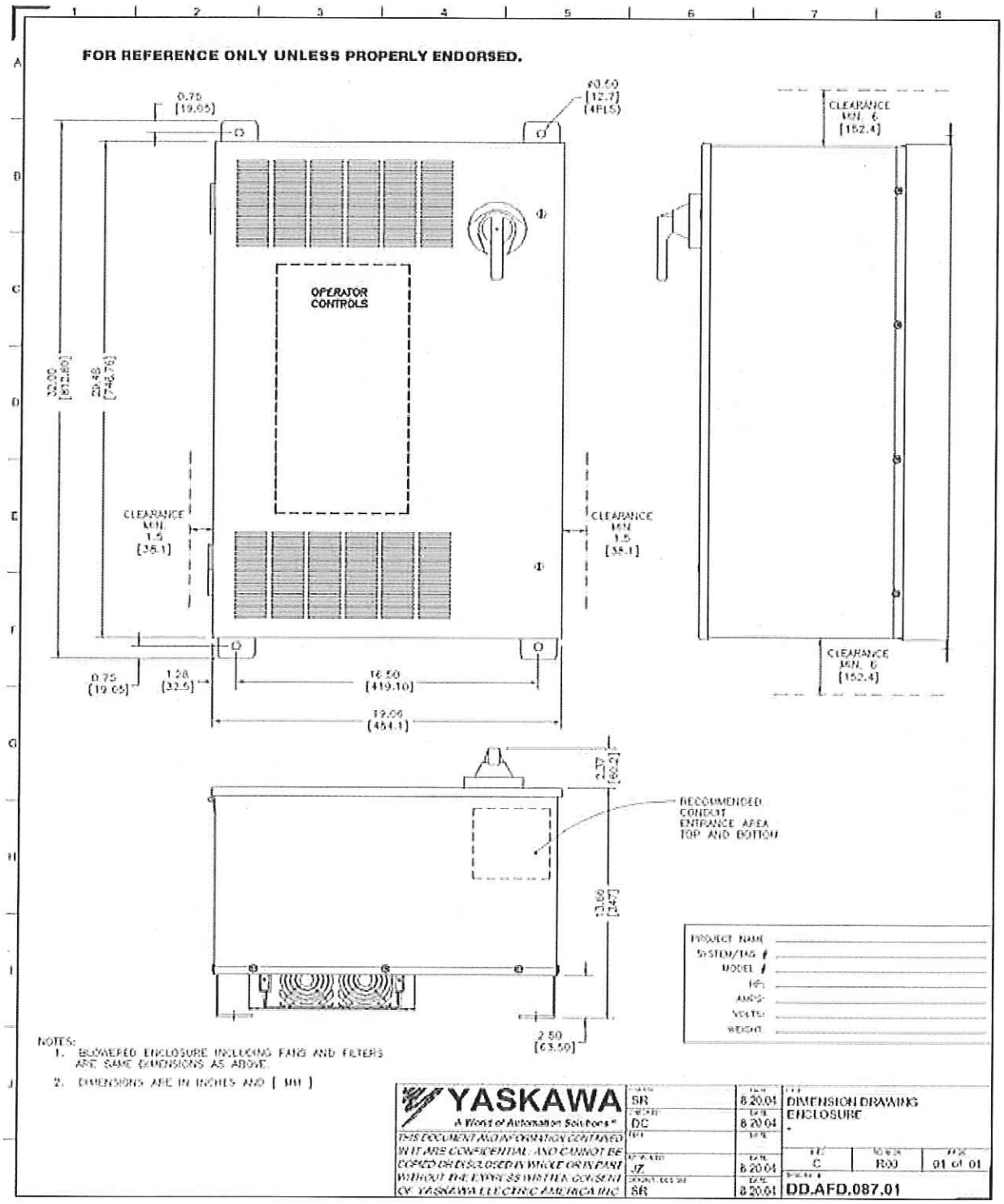

Heat Pipe Technology, Inc.

4340 NE 49th Ave. Gainesville, FL 32609
Phone: 352-367-0999 Fax: 352-367-1688
Web: www.heatpipe.com Email: sales@heatpipe.com

Project Name:
Equipment:
Rep:

Engineer:
By:
Date: 12/10/2009

ENERGY RECOVERY HEAT PIPE PERFORMANCE

Total Heat Recovered: 674,808 (Btu/h) Elevation: (ft) Air Type: Standard

SUPPLY SIDE						EXHAUST SIDE	
Presure Drop:	0.75 in-H2O	13,500	CFM			Presure Drop:	1.37 in-H2O
Delta T:	46.24°F	0.00	°Fdb	52.83	°Fdb	Delta T:	29.17°F
Temp Eff.:	56.39 %	-1.00	°Fwb	52.83	°Fwb	Temp Eff.:	35.57 %
Condensation:	0. lbs/h	67.0	%Rh	100.0	%Rh	Condensation:	211.62 lbs/h
Face Velocity:	600. SFPM					Face Velocity:	622.22 SFPM
		SUPPLY		EXHAUST			
		46.24	°Fdb	82.00	°Fdb		
		31.80	°Fwb	68.50	°Fwb		
		8.02	%Rh	50.66	%Rh		
				14,000	CFM		

HEAT PIPE PHYSICAL DATA

SUPPLY SIDE		EXHAUST SIDE	
FH:	60.00 in.	FH:	60.00 in.
FL:	54.00 in.	FL:	54.00 in.
Face Area:	22.5 sq.ft.	Face Area:	22.5 sq.ft.
Fins:	12 FPI	Fins:	12 FPI
Tubing:	1/2 in.	Tubing:	1/2 in.
Rows:	6	Rows:	6

Notes:

R-134a

Above technical data is made available as a guide for the design engineer. Information is given gratis and manufacturer assumes no obligation or liability for results

Coil Nomenclature		
Tubes	Fins	Frame
Diameter: 1/2" 6 Rows	FPI: 12 Coating: Electrofin Coating	Box Type: Side Plate
Material: Copper	Material: Aluminium	Material: 16 ga Stainless Steel
Surface: Rifled	Surface: Sine Wave	Refrigerant: R-134a

This drawing may contain patented or proprietary information and must not be used for manufacturing or any other purpose without the express written consent of Heat Pipe Technology. Acceptance of this drawing will be construed as an agreement to and acceptance of the foregoing.

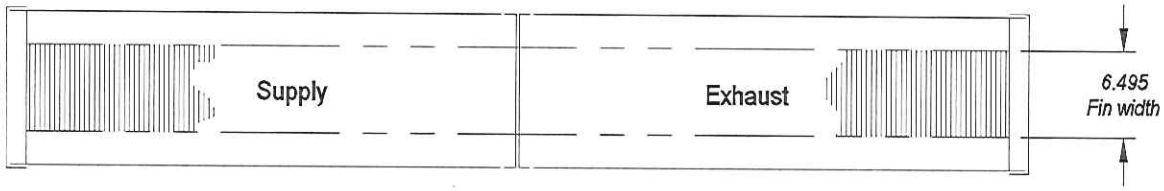

Section A-A

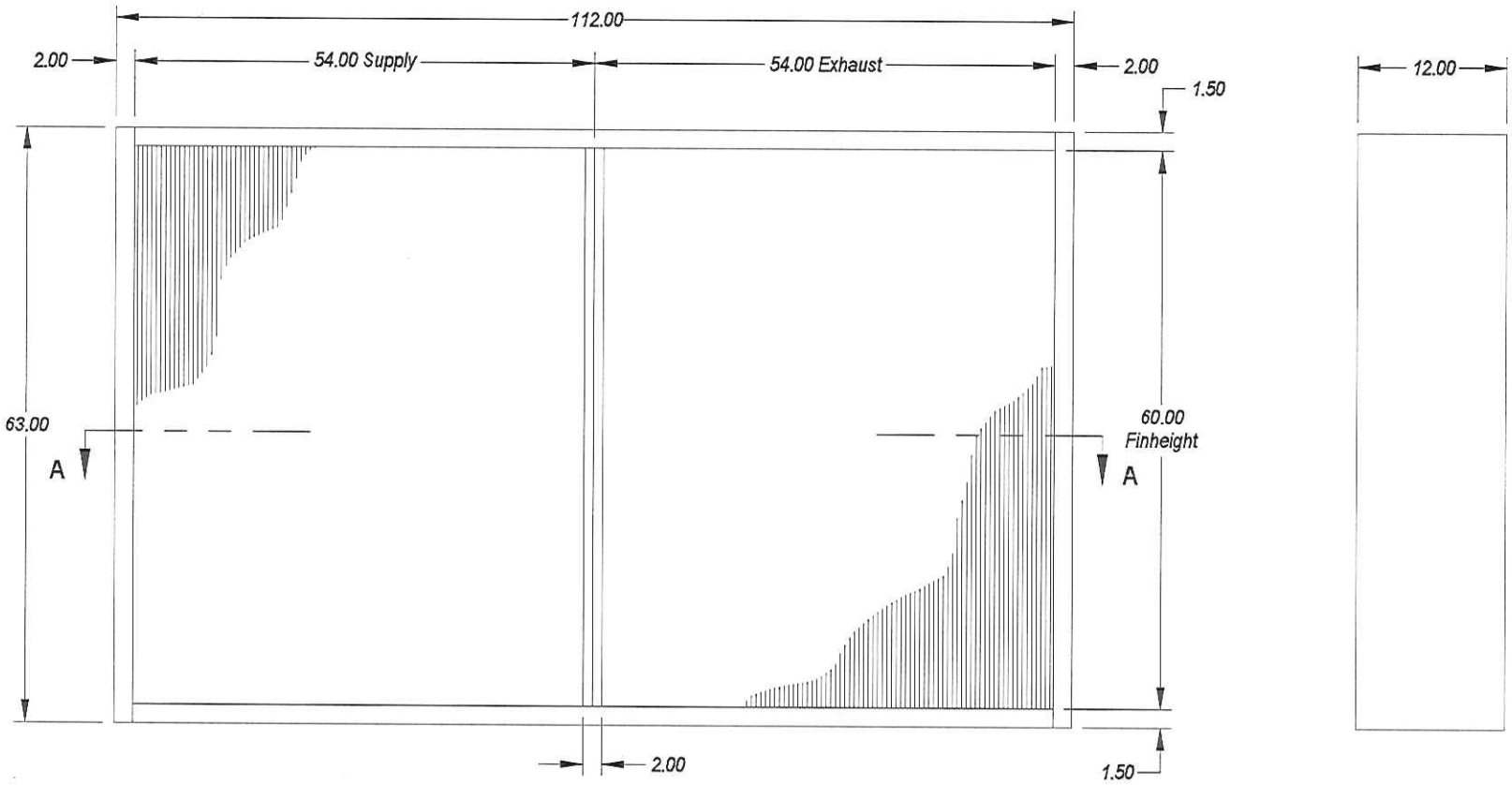

Heat Pipe Technology, Inc.
4340 NE 49th Ave., Gainesville, Florida 32609
Phone: (352)367-0999 Fax: (352)367-1688

HRM-6R 060.00 x 108.00
(Approx. Weight: 865 lbs)

Date: 12/10/2009 9:40:03 AM	Drawn By: HPT-V5.08	Scale: N/A
Approved:	Project No:	Dwg No:

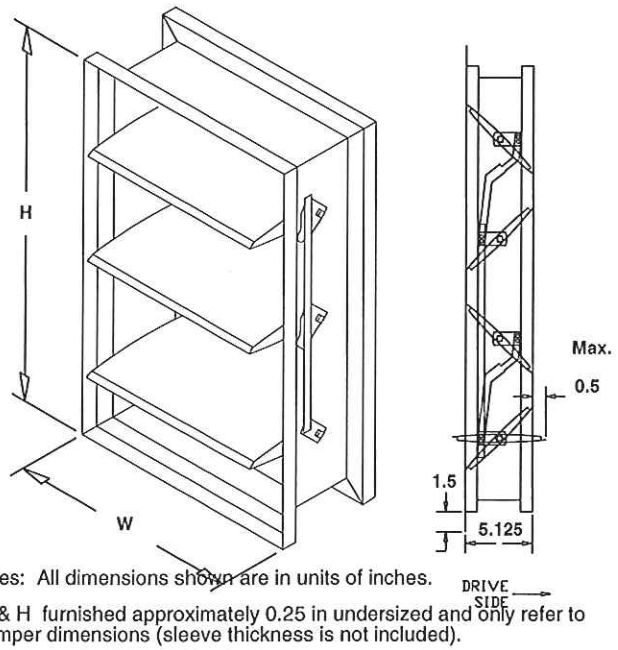

Notes: All dimensions shown are in units of inches.

W & H furnished approximately 0.25 in undersized and only refer to damper dimensions (sleeve thickness is not included).

Electrical accessory wiring terminates at the accessory.
Field wiring is required to individual components.

VCD-43

Ultra Low Leakage Control Damper

Application & Design

The model VCD-43 is an extremely low leakage control damper designed to meet the highest standards established for commercial control dampers. Non-jackshafted dampers will be supplied with a blade drive lever for internal actuator mounting unless external actuator mounting is specified in which case an extension pin with clip kit will be provided. Note: The extension pin with clip kit includes the extension pin and clip. The VCD-43 is intended for application in medium to high pressure and velocity systems.

- FRAME: Aluminum, 5 in x 1 in hat channel, low profile head and sill on dampers 17 in high and smaller.
- BLADES: Heavy gauge extruded aluminum, airfoil shape 6 in maximum depth.
- LINKAGE: Side linkage out of air stream, concealed in frame.
- SEALS: EPDM blade seals. Flexible metal compression type jamb seals.
- AXLES: 0.5 in dia.

CONSTRUCTION FEATURES

Blade Action:	Opposed	**Sizing:**	Nominal
Frame Type:	Reversed Flange	**Frame Thickness (in):**	0.125
Material:	Aluminum	**Actuator Type:**	24 VAC
Axle Material:	304 SS	**Actuator Mount:**	External
Axle Bearings:	304 SS	**Actuator Location:**	Left Side
Linkage Material:	304 SS	**Fail Position:**	Closed
Blade Seal:	EPDM	**Cycle:**	60 Cycle
Jamb Seal Mat.:	304 SS	**Auxiliary Switches:**	Yes

ID #	Tag	Qty	W (in)	H (in)	Drive Arr.	Actuator	Act. Qty.
3-1	OA	1	44.000	66.000	11-1FEL-0	AF-24MFTS	1
Tags:							
3-2	EA	1	24.000	60.000	11-1FEL-0	NF-24SR-S	1
Tags:							

Pressure Drop Data

VCD-43

This pressure drop testing was conducted in accordance with AMCA Standard 500 using the three configurations shown. All data has been corrected to represent standard air at a density of 0.075 lb/ft3.
Actual pressure drop found in any HVAC system is a combination of many factors. This pressure drop information along with an analysis of other system influences should be used to estimate actual pressure losses for a damper installed in a given HVAC system.

AMCA Test Figures

Figure 5.3 Illustrates a fully ducted damper. This configuration has the lowest pressure drop of the three test configurations because entrance and exit losses are minimized by straight duct runs upstream and downstream of the damper.

Figure 5.2 Illustrates a ducted damper exhausting air into an open area. This configuration has a lower pressure drop than Figure 5.5 because entrance losses are minimized by a straight duct run upstream of the damper.

Figure 5.5 Illustrates a plenum mounted damper. This configuration has the highest pressure drop because of extremely high
entrance and exit losses due to the sudden changes of area in the system.

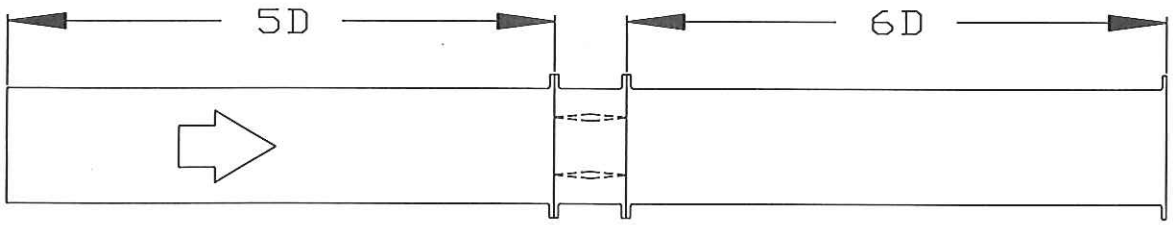

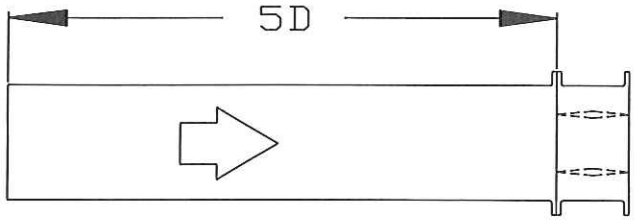

$$D = \sqrt{\frac{4(W)(H)}{3.14}}$$

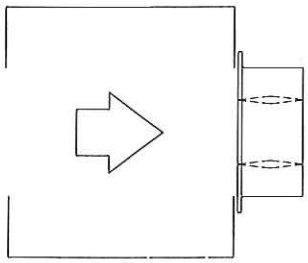

Belimo AF-24-MFT-S Actuator

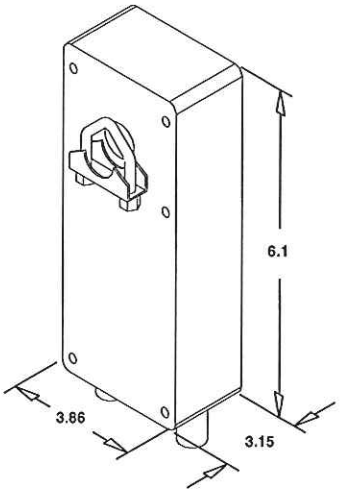

All Dimensions shown are in units of inches.

Actuator wiring terminates at the actuator. Field wiring is required to individual actuator(s).

This actuator is for modulating, spring return applications. The damper is directly is directly driven to a position directly proportional to a 0-10Vdc control signal. With the power off the spring returns the damper to the closed position. The SPDT auxiliary switch makes (or breaks) a circuit at powered end of stroke.

* Power supply: 24Vac, 50/60Hz or 24Vdc
* Power Consumption Running: 6 Watts
* Power Consumption Holding: 2 Watts
* Rated Torque: 133 in-lb
* Locations: NEMA Type 2 enclosure, indoor drip proof
  (Optional Actuator Housings at an Additional Cost: NEMA 4X or NEMA 7)

Belimo NF-24SR-S Actuator

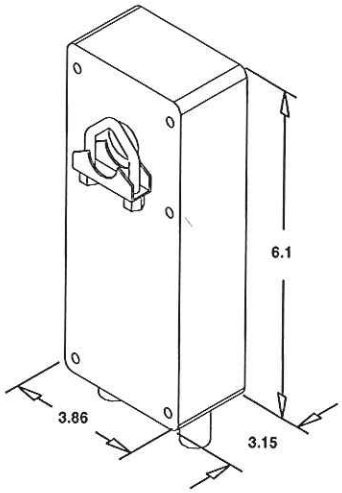

All Dimensions shown are in units of inches.

Actuator wiring terminates at the actuator. Field wiring is required to individual actuator(s).

This actuator is for modulating, spring return applications. The damper is directly driven to a position directly proportional to a 0-10Vdc control signal. With the power off the spring returns the damper to the closed position. The SPDT auxiliary switch makes (or breaks) a circuit at powered end of stroke.

* Power supply: 24Vac, 50/60Hz or 24Vdc
* Power Consumption Running: 5 Watts
* Power Consumption Holding: 2.6 Watts
* Rated Torque: 60 in-lb
* Locations: NEMA Type 2 enclosure, indoor dripproof
  (Optional Actuator Housings at an Additional Cost: NEMA 4X or NEMA 7)

GREENHECK
Building Value in Air.

Printed Date: 12/15/2009
Job: Q-1885 Dover Pool - Rev0
Product Type: Damper
Mark: Damper-3

VCD-43V

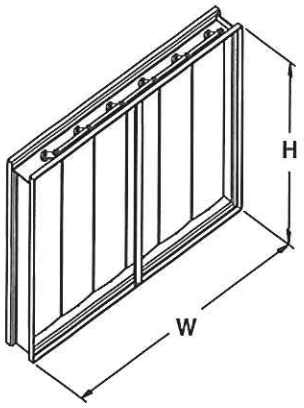

Application & Design

The model VCD-43V is an extremely low leakage, vertical blade, control damper designed to meet the highest standards established for commercial control dampers. Non-jackshafted dampers will be supplied with a blade drive lever for internal actuator mounting unless external actuator mounting is specified in which case an extension pin with clip kit will be provided. Note: The extension pin with clip kit includes the extension pin and clip. The VCD-43V is intended for application in medium to high pressure and velocity systems.

- FRAME: Aluminum, 5 in x 1 in hat channel, low profile head and sill on dampers 17 in high and smaller.
- BLADES: Vertical orientation, heavy gauge extruded aluminum, airfoil shape 6 in maximum depth.
- LINKAGE: Side linkage out of air stream, concealed in frame.
- SEALS: Extruded silicone rubber blade seals. Flexible metal compression type jamb seals.
- AXLES: 0.5 in dia.

Consult factory for drawings with sleeves or transitions.
Notes: All dimensions shown are in units of inches.

W & H furnished approximately 0.25 in undersized and only refer to damper dimensions (sleeve thickness is not included).

Electrical accessory wiring terminates at the accessory.
Field wiring is required to individual components.

CONSTRUCTION FEATURES

Blade Action:	Opposed	**Sizing:**	Nominal
Frame Type:	Reversed Flange	**Frame Thickness (in):**	0.125
Material:	Aluminum	**Actuator Type:**	24 VAC
Axle Material:	304 SS	**Actuator Mount:**	External
Axle Bearings:	304 SS	**Actuator Location:**	Left Side
Linkage Material:	304 SS	**Fail Position:**	Open
Blade Seal:	EPDM	**Cycle:**	60 Cycle
Jamb Seal Mat.:	304 SS	**Auxiliary Switches:**	Yes

ID #	Tag	Qty	W (in)	H (in)	Drive Arr.	Actuator	Act. Qty.
4-1	Recirc	1	16.000	60.000	11-1FEL-0	AF-24MFTS	1
Tags:							

Pressure Drop Data

VCD-43V

This pressure drop testing was conducted in accordance with AMCA Standard 500 using the three configurations shown. All data has been corrected to represent standard air at a density of 0.075 lb/ft3.
Actual pressure drop found in any HVAC system is a combination of many factors. This pressure drop information along with an analysis of other system influences should be used to estimate actual pressure losses for a damper installed in a given HVAC system.

AMCA Test Figures

Figure 5.3 Illustrates a fully ducted damper. This configuration has the lowest pressure drop of the three test configurations because entrance and exit losses are minimized by straight duct runs upstream and downstream of the damper.

Figure 5.2 Illustrates a ducted damper exhausting air into an open area. This configuration has a lower pressure drop than Figure 5.5 because entrance losses are minimized by a straight duct run upstream of the damper.

Figure 5.5 Illustrates a plenum mounted damper. This configuration has the highest pressure drop because of extremely high
entrance and exit losses due to the sudden changes of area in the system.

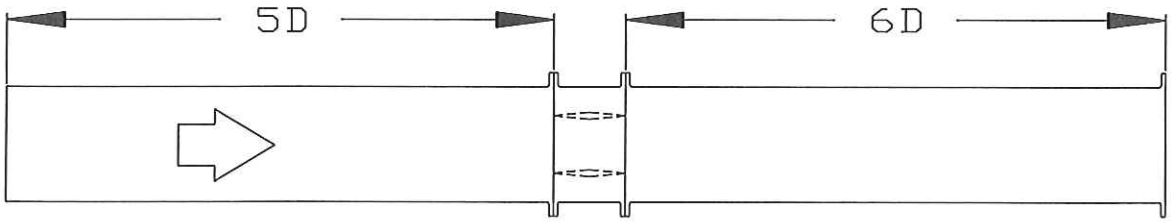

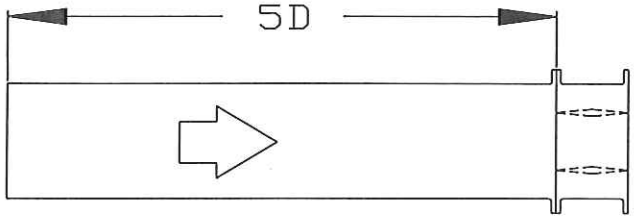

$$D = \sqrt{\frac{4(W)(H)}{3.14}}$$

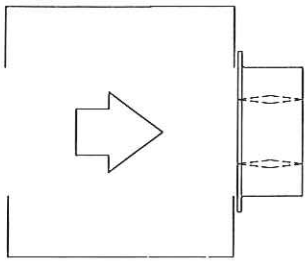

Belimo AF-24-MFT-S Actuator

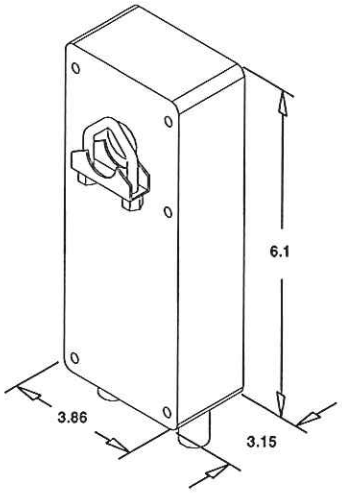

All Dimensions shown are in units of inches.

Actuator wiring terminates at the actuator. Field wiring is required to individual actuator(s).

This actuator is for modulating, spring return applications. The damper is directly is directly driven to a position directly proportional to a 0-10Vdc control signal. With the power off the spring returns the damper to the closed position. The SPDT auxiliary switch makes (or breaks) a circuit at powered end of stroke.

* Power supply: 24Vac, 50/60Hz or 24Vdc
* Power Consumption Running: 6 Watts
* Power Consumption Holding: 2 Watts
* Rated Torque: 133 in-lb
* Locations: NEMA Type 2 enclosure, indoor drip proof
  (Optional Actuator Housings at an Additional Cost: NEMA 4X or NEMA 7)

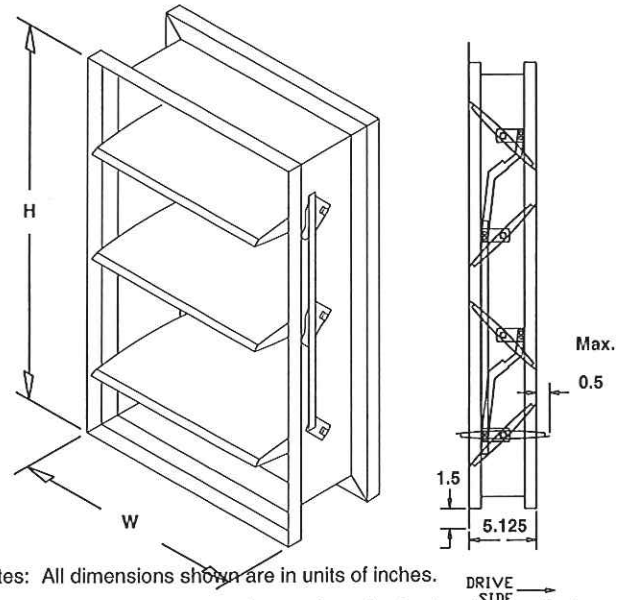

Notes: All dimensions shown are in units of inches.

W & H furnished approximately 0.25 in undersized and only refer to damper dimensions (sleeve thickness is not included).

Electrical accessory wiring terminates at the accessory.
Field wiring is required to individual components.

VCD-43

Ultra Low Leakage Control Damper

Application & Design

The model VCD-43 is an extremely low leakage control damper designed to meet the highest standards established for commercial control dampers. Non-jackshafted dampers will be supplied with a blade drive lever for internal actuator mounting unless external actuator mounting is specified in which case an extension pin with clip kit will be provided. Note: The extension pin with clip kit includes the extension pin and clip. The VCD-43 is intended for application in medium to high pressure and velocity systems.

- FRAME: Aluminum, 5 in x 1 in hat channel, low profile head and sill on dampers 17 in high and smaller.
- BLADES: Heavy gauge extruded aluminum, airfoil shape 6 in maximum depth.
- LINKAGE: Side linkage out of air stream, concealed in frame.
- SEALS: EPDM blade seals. Flexible metal compression type jamb seals.
- AXLES: 0.5 in dia.

CONSTRUCTION FEATURES

Blade Action:	Opposed	**Sizing:**	Nominal
Frame Type:	Reversed Flange	**Frame Thickness (in):**	0.125
Material:	Aluminum	**Actuator Type:**	24 VAC
Axle Material:	304 SS	**Actuator Mount:**	Internal
Axle Bearings:	304 SS	**Actuator Location:**	Left Side
Linkage Material:	304 SS	**Fail Position:**	Closed
Blade Seal:	EPDM	**Cycle:**	60 Cycle
Jamb Seal Mat.:	304 SS	**Auxiliary Switches:**	Yes

ID #	Tag	Qty	W (in)	H (in)	Drive Arr.	Actuator	Act. Qty.
5-1	EA Bypass	1	12.000	53.000	11-1FIL-0	TF24-SR-S	1
Tags:							
6-2	SA Bypass	1	12.000	53.000	11-1FIL-0	TF24-SR-S	1
Tags:							

Pressure Drop Data

VCD-43

This pressure drop testing was conducted in accordance with AMCA Standard 500 using the three configurations shown. All data has been corrected to represent standard air at a density of 0.075 lb/ft3.
Actual pressure drop found in any HVAC system is a combination of many factors. This pressure drop information along with an analysis of other system influences should be used to estimate actual pressure losses for a damper installed in a given HVAC system.

AMCA Test Figures

Figure 5.3 Illustrates a fully ducted damper. This configuration has the lowest pressure drop of the three test configurations because entrance and exit losses are minimized by straight duct runs upstream and downstream of the damper.

Figure 5.2 Illustrates a ducted damper exhausting air into an open area. This configuration has a lower pressure drop than Figure 5.5 because entrance losses are minimized by a straight duct run upstream of the damper.

Figure 5.5 Illustrates a plenum mounted damper. This configuration has the highest pressure drop because of extremely high
entrance and exit losses due to the sudden changes of area in the system.

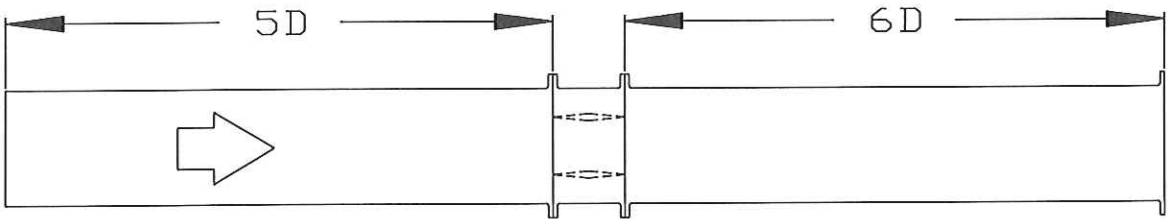

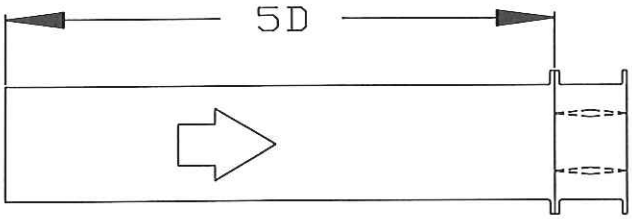

$$D = \sqrt{\frac{4(W)(H)}{3.14}}$$

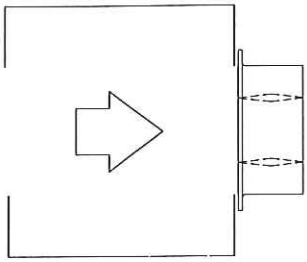

Belimo TF24-SR-S Actuator

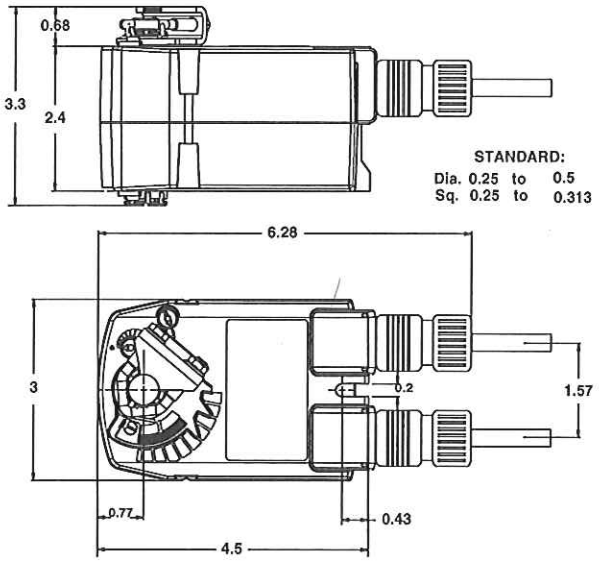

All Dimensions shown are in units of inches.

Actuator wiring terminates at the actuator. Field wiring is required to individual actuator(s).

Application
The TF series actuators provide true spring return operation for reliable fail-safe application and positive close off on air tight dampers. The spring return system provides consistent torque to the damper with and without power applied to the actuator. The TFxxx-S version is provided with one built in auxiliary switches.
Torque rating (at rating voltage)
18 in. lb (2N#m) constant
Timing (at rated torque and voltage)
Motor: Less than 75 seconds; (TF24-SR & -S is 95 seconds)
Spring : Less than 25 seconds
Voltage Input in VAC: 24 VAC/VDC
Environmental Protection Ratings:
Nema 2

Damper & Louver Drive Arrangements

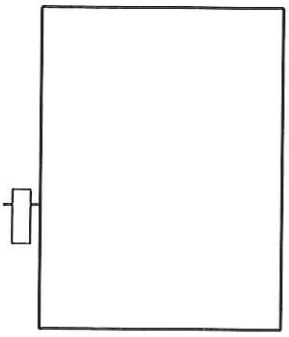

11-1FEL-0 or 11CEL-0

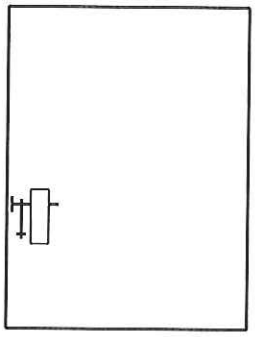

11-1FIL-0 or 11-1CIL-0

ENERGY COST INDEX ★★★★★

30/30®

High-Capacity MERV 8 Pleated Panel Filter

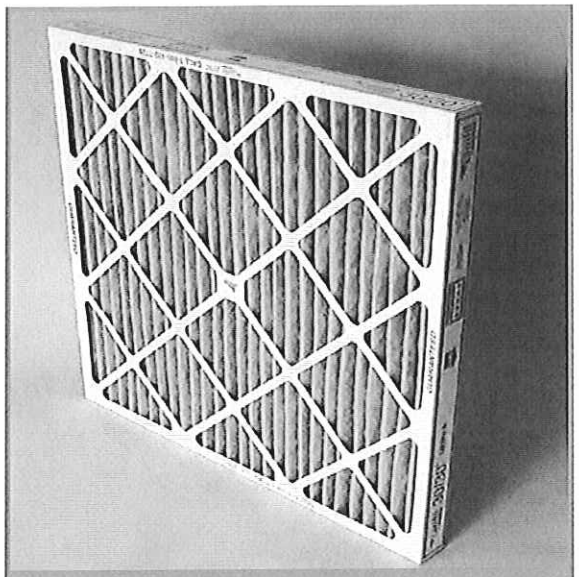

The best performing pleated panel filter — guaranteed!

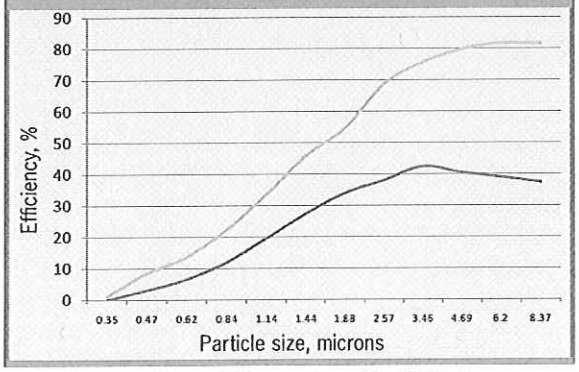

Composite minimum efficiency values of the 30/30 when evaluated per ASHRAE Standard 52.2-2007. The 30/30 has a MERV of 8 and MERV-A of 8 when tested per appendix J.

This line is representative of a MERV 8 filter that uses electret media enhancement to obtain a MERV 8. The values are after approximately two weeks of operation.

The Camfil Farr 30/30 has set the industry standard for pleated panel filters since 1963. With over 45 design enhancements, it continues to provide the industry's best value for medium efficiency filtration.

Setting the standard by which other pleated filters are judged, modern media manufacturing techniques and proprietary technological advancements ensure that the Camfil Farr 30/30 is:

- *Guaranteed to perform at the rated efficiency, or better, throughout the life of the filter.*
- *Guaranteed to last longer than any other pleated panel filter available.*

LASTS LONGER
Product Performance Guaranteed
LIFETIME EFFICIENCY

Performing at MERV 8, using a mechanical particle capture principle, the 30/30 will not drop in efficiency while in service as will other pleated panel filters that incorporate an electret charge to obtain a MERV 8 value.

Its radial pleat design provides the longest life and lowest average pressure drop reducing the number of filter changes so your facility will use less fan power to move air through the filter.

The high wet-strength beverage frame and welded wire media backing provide structural integrity in any type of HVAC application virtually eliminating the additional costs associated with filter bypass or filter failure.

Available in 1", 2" or 4" deep configurations, the 30/30 is ideal for commercial, industrial, institutional or any other application where the ultimate level of protection of equipment and indoor air quality is a concern.

The Camfil Farr 30/30 has an Energy Cost Index (ECI) of five stars, the highest performance rating available.

[1] A 5-star rating indicates that this filter performs in the top 20% of all products of similar construction in the HVAC industry. Factors of consideration include maintained efficiency, energy usage and resistance to air flow. Detailed evaluation information is available from your Camfil Farr sales outlet or on the web at www.camfilfarr.com.

camfil FARR

Camfil Farr	Product Sheet
30/30®	1002 - 0608
Camfil Farr - clean air solutions	

Camfil Farr 30/30®

The highest media weight, more than any other pleated panel filter, and uniform lofting for high dust holding capacity, ensure that the 30/30 will last longer in any HVAC application.

Exclusive MERV 8 Performance from Camfil Farr Media

The 30/30 media is manufactured from a proprietary blend of fibers that incorporate a mechanical principle of particle capture. The filter does not require an electret charge which would dissipate and reduce filter's efficiency after minimal hours of operation in a system. The media is lofted to a uniform depth to enhance the depth-loading characteristic and ensure the longest life of any pleated filter available. The high-loft also offers a lower resistance to airflow so fan horsepower required to move air through the filter is minimized. Camfil Farr evaluates the quality of all incoming raw materials to maintain product integrity as part of a rigorous quality control program.

Welded Wire Grid Maintains Radial Pleat Design

The media is formed into a radial pleat for uniform dust loading and full use of the media area. V-style pleats blind while loading preventing full utilization of the media area and increasing the filters pressure drop resulting in increased energy usage. A welded wire grid, spot welded on one-inch centers maintains each radial pleat and maintains media stability through varying airflows.

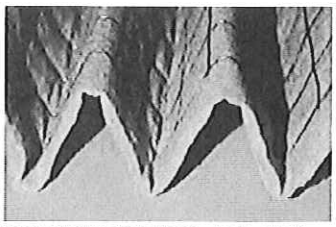

Rounded radial pleats, instead of v-shape pleats, allow full usage of media area.

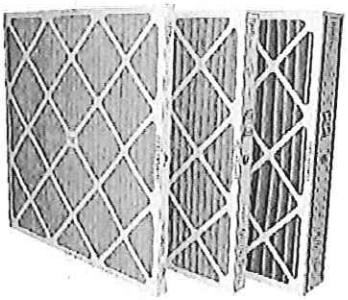

Diagonal support members, glued to each pleat at its apex, helps maintain pleat stability and filter rigidity.

High Wet-Strength Beverage Board Frame

The high wet-strength beverage board frame, the thickest board in the industry, creates a stable and non-yielding media pack. Filter bypass is virtually eliminated because the filter fits securely in the filter holding mechanism. The media is bonded to the frame ensuring that all of the air seen by the filter will be treated by the filter. Diagonal support members are bonded to each pleat to maintain pleat spacing and add stability to the pack through bridge-style engineering. The 30/30 is guaranteed to 2.0" w.g. of pressure filter without failure. Costly filter blowouts and compromising of HVAC system cleanliness is eliminated.

ISO 9001:2000 Certified Quality Control

Every 30/30 filter is identified on the frame with a unique manufacturing code that allows us to analyze every component of construction from raw materials to the point where the product is boxed for shipping. Filters are inspected for structural integrity so they are capable of operating in the harshest HVAC system conditions. The adhesiveness of diagonal support members to pleat apexes is inspected so pleat spacing is uniform to provide longer filter life. Each media lot is laboratory tested to confirm consistent performance and individual filters are submitted from each manufacturing facility on a strict schedule for ASHRAE 52.2 testing in our world-class testing facility.

The standard of the industry, by Camfil Farr.

Used in many systems as a prefilter, the 30/30 extends the life of final filters by capturing larger contaminant and thereby allowing the final filters to concentrate on moving smaller particles such as those that are respirable and can cause lung damage. The 30/30 is also an excellent choice when applied as the only filter in a system to keep coils clean and maintain efficiency, and protect building occupants from contaminants of annoyance such as pollen, plant spores, atmospheric dusts and other indoor air irritants.

Unprecedented Industry Guarantee

If our filters don't outlast and outperform your current filters, we'll replace them, FREE. For guarantee details and a distributor list, visit www.camfilfarr.com.

PERFORMANCE DATA **Camfil Farr 30/30®**

2" Deep Filter (actual filter depth 1.75")

Part Number	Nominal Size (inches)	Actual Size (inches)				Initial Resistance (inches w.g.)	Total Media Area (sq. ft.)	Pleats per Linear Foot
		Height	Width	Depth	High			
049880-019	16 x 16 x 2	15.50	15.50	1.75	890	0.31	7.8	15 pleats per linear foot
049880-008	20 x 10 x 2	19.50	9.50		700		6.0	
049880-009	20 x 14 x 2	19.50	13.50		975		8.3	
049880-007	20 x 12 x 2	19.50	11.88		835		7.4	
049880-011	20 x 15 x 2	19.50	14.50		1045		9.3	
049880-001	20 x 16 x 2	19.50	15.50		1100		9.9	
049880-013	20 x 18 x 2	19.50	17.50		1250		10.8	
049880-002	20 x 20 x 2	19.50	19.50		1390		11.9	
402271-007	20 x 30 x 2	19.50	29.50		2085		18.2	
049880-006	24 x 12 x 2	23.38	11.38		1000		8.4	
049880-015	24 x 18 x 2	23.50	17.50		1500		13.0	
049880-012	24 x 20 x 2	23.50	19.50		1670		14.3	
049880-005	24 x 24 x 2	23.38	23.38		2000		17.3	
049880-010	25 x 14 x 2	24.50	13.50		1220		10.4	
049880-020	25 x 15 x 2	24.50	14.50		1300		11.6	
049880-016	24 x 16 x 2	24.50	15.50		1335		11.8	
049880-004	25 x 16 x 2	24.50	15.50		1390		12.4	
049880-014	25 x 18 x 2	24.50	17.50		1565		13.5	
049880-003	25 x 20 x 2	24.50	19.50		1740		14.9	
049880-018	25 x 25 x 2	24.50	24.50		2170		19	

1" Deep Filter (actual filter depth 0.88")

Part Number	Nominal Size (inches)	Actual Size (inches)			Airflow Capacity (cfm)	Initial Resistance (inches w.g.)	Total Media Area (sq. ft.)	Pleats per Linear Foot
		Height	Width	Depth				
054862-018	10 x 10 x 1	9.50	9.50	0.88	240	0.23	1.6	16 pleats per linear foot
054862-025	12 x 12 x 1	11.50	11.50		350		2.5	
054862-027	16 x 12 x 1	15.50	11.50		470		3.3	
054862-012	16 x 16 x 1	15.50	15.50		620		4.3	
054862-009	20 x 7 x 1	19.50	6.50		340		2.4	
054862-016	20 x 10 x 1	19.50	9.50		490		3.3	
054862-019	20 x 12 x1	19.50	11.50		580		4.1	
054862-006	20 x 14 x 1	19.50	13.50		680		4.6	
054862-008	20 x 15 x 1	19.50	14.50		730		5.1	
054862-001	20 x 16 x 1	19.50	15.50		780		5.4	
054862-020	20 x 18 x 1	19.50	17.50		880		6.1	
054862-002	20 x 20 x 1	19.50	19.50		970		6.6	
054862-021	22 x 22 x 1	21.50	21.50		1180		8.2	
054862-022	24 x 10 x 1	23.50	9.50		580		4.0	
054862-010	24 x 12 x 1	23.50	11.50		700		4.9	
054862-026	24 x 14 x 1	23.50	13.50		820		5.5	
054862-015	24 x 16 x 1	23.50	15.50		970		6.7	
054862-028	24 x 18 x 1	23.50	17.50		1050		7.3	
054862-011	24 x 20 x 1	23.50	19.50		1165		8.0	
054862-005	24 x 24 x 1	23.50	23.50		1400		9.8	
054862-023	25 x 10 x 1	24.50	9.50		610		4.1	
054862-024	25 x 12 x 1	24.50	11.50		730		5.2	
054862-007	25 x 14 x 1	24.50	13.50		850		5.7	
054862-013	25 x 15 x 1	24.50	14.50		910		6.4	
054862-004	25 x 16 x 1	24.50	15.50		970		6.7	
054862-017	25 x 18 x 1	24.50	17.50		1100		7.6	
054862-003	25 x 20 x 1	24.50	19.50		1215		8.3	
054862-014	25 x 25 x 1	24.50	24.50		1520		10.5	

Data Notes:
1.0" w.g. recommended final resistance for all depths. System design may dictate an alternative changeout point. Contact factory for guidance.
Has been qualified by Underwriters Laboratories as UL Class 2.
Maximum operating temperature 200° F (93° C).
2" and 4" deep filters rated at 250 feet per minute (fpm) medium and 500 fpm high. 1" deep filter's rated at 175 fpm medium and 350 fpm high.
For product specification in RTF format please go to www.camfilfarr.com.

4" Deep Filter (actual filter depth 3.75")

Part Number	Nominal Size (inches)	Actual Size (inches)			Airflow Capacity (cfm)	Initial Resistance (inches w.g.)	Total Media Area (sq. ft.)	Pleats per Linear Foot
		Height	Width	Depth				
059413-004	20 x 16 x 4	19.38	15.38	3.75	1100	0.27	15.7	11 pleats per linear foot
059413-003	20 x 20 x 4	19.38	19.38		1390		18.9	
059413-002	24 x 12 x 4	23.38	11.38		1000		13.9	
059413-009	24 x 18 x 4	23.38	17.38		1500		20.2	
059413-008	24 x 20 x 4	23.38	19.38		1670		22.7	
059413-001	24 x 24 x 4	23.38	23.38		2000		27.7	
059413-005	25 x 16 x 4	24.38	15.38		1390		19.7	
059413-006	25 x 20 x 4	24.38	19.38		1740		23.6	
059413-010	25 x 25 x 4	24.38	24.38		2170		30.0	
059413-007	25 x 29 x 4	24.38	28.38		2520		35.4	

Data Notes:
1.0" w.g. recommended final resistance for all depths. System design may dictate an alternative changeout point. Contact factory for guidance.
30/30 has been qualified by Underwriters Laboratories as UL Class 2.
Maximum operating temperature 200° F (93° C).
2" and 4" deep filters are rated at 250 feet per minute (fpm) medium and 500 fpm high. 1" deep filters are rated at 175 fpm medium and 350 fpm high.

4" deep 30/30 is available with a header for side-access housing installation. Request Product Sheet 1003.

Available in UL Class One for locations having this building code requirement. Request Product Sheet 1002CL1.

1.0 General

1.1 - Air filters shall be medium efficiency ASHRAE pleated panels consisting of cotton and synthetic media, welded wire media support grid, and beverage board enclosing frame.

1.2 - Sizes shall be noted on drawings or other supporting materials.

2.0 Construction

2.1 - Filter media shall be a cotton and synthetic blend, lofted to a uniform depth of 0.15", and formed into a uniform radial pleat.

2.2 - A welded wire grid, spot-welded on one-inch centers and treated for corrosion resistance shall be bonded to the downstream side of the media to maintain radial pleats and prevent media oscillation.

2.3 - An enclosing frame of no less than 28-point high wet-strength beverage board shall provide a rigid and durable enclosure. The frame shall be bonded to the media on all sides to prevent air bypass. Integral diagonal support members on the air entering and air exiting side shall be bonded to the apex of each pleat to maintain uniform pleat spacing in varying airflows.

3.0 Performance

3.1 - The filter shall have a Minimum Efficiency Reporting Value of MERV 8 when evaluated under the guidelines of ASHRAE Standard 52.2-2007. It shall also have a MERV-A of 8 when tested per Appendix J of the same standard. The media shall maintain or increase in efficiency over the life of the filter.

3.2 - Initial resistance to airflow shall not exceed 0.31" for a 2" deep, 0.23" for a 1" deep, or 0.27" for a 4" deep filter at respective velocities of 500, 350 or 500 fpm.

3.3 - The filter shall be classified by Underwriters Laboratories as UL Class 2.

3.4 - Manufacturer shall guarantee the integrity of the filter pack to 2.0" w.g.

3.5 - Manufacturer shall provide evidence of facility certification to ISO 9001:2000.

Supporting Data - Provide product laboratory test report for each depth listed including all details as prescribed in ASHRAE Standard 52.2-2007 including appendix J.

Camfil Farr has a policy of uninterrupted research, development and product improvement. We reserve the right to change designs and specifications without notice.

Camfil Farr, Inc.
United States Tel: (973) 616-7300 Fax: (973) 616-7771
Canada Tel: (450) 629-3030 Fax: (450) 662-6035
E-mail: camfilfarr@camfilfarr.com

© Camfil Farr http://www.camfilfarr.com

LASTS LONGER Product Performance Guaranteed LIFETIME EFFICIENCY

ENERGY COST INDEX

camfil FARR Certified Quality System ISO 9001:2000

30/30®

Initial Resistance Versus Airflow

Final resistance (maximum recommended) is 1.0" w.g. (250 Pa).
System design may dictate a lower change out point.
Maximum continuous operating temperature 180° F (82° C).
Consult factory before operating in dotted line region.

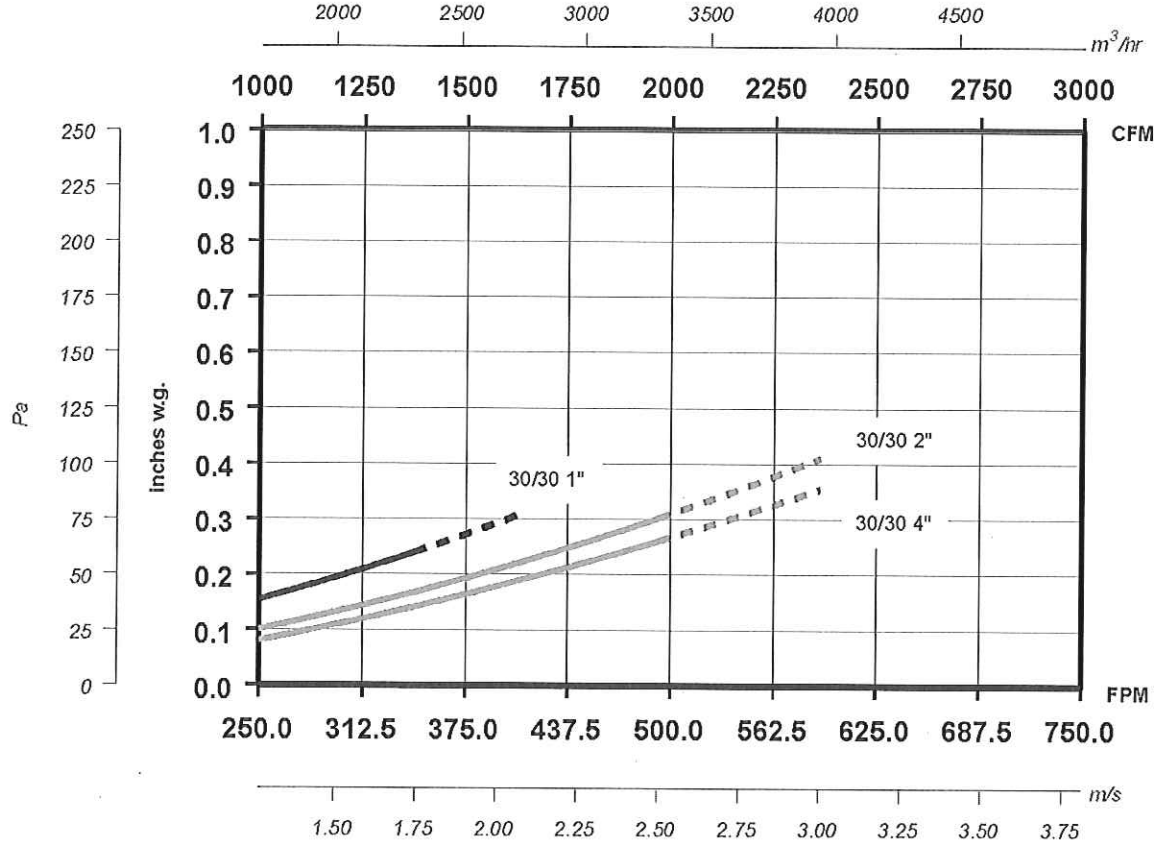

Camfil Farr	Technical Data
30/30®	1002-IRVA- 0408
Camfil Farr - clean air solutions	

© Camfil Farr

Series 2000

Magnehelic® Differential Pressure Gages

Indicate Positive, Negative or Differential, Accurate within 2%

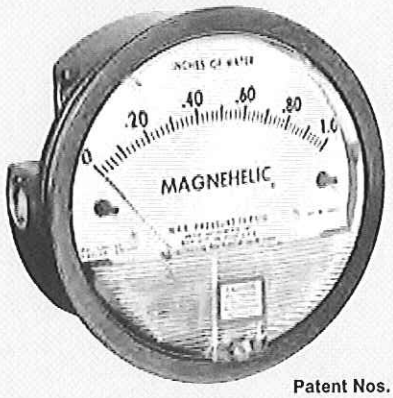

Patent Nos. 4,030,365
5,012,678

Standard Magnehelic® Pressure Gage has a large, easy-to-read 4" dial.

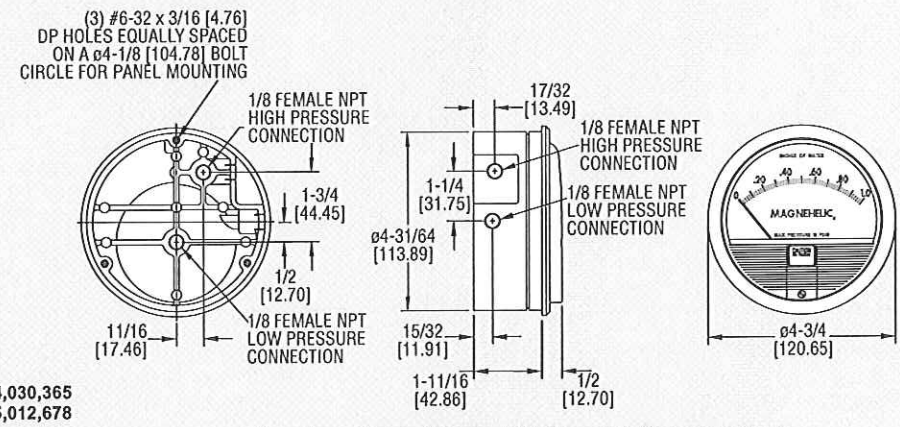

Dimensions, Standard Series 2000 Magnehelic® Pressure Gages. (Slightly different on medium and high pressure models)

Select the Dwyer® Magnehelic® gage for high accuracy – guaranteed within 2% of full scale – and for the wide choice of 81 models available to suit your needs precisely. Using Dwyer's simple, frictionless Magnehelic® gage movement, it quickly indicates low air or non-corrosive gas pressures – either positive, negative (vacuum) or differential. The design resists shock, vibration and over-pressures. No manometer fluid to evaporate, freeze or cause toxic or leveling problems. It's inexpensive, too.

The Magnehelic® gage is the industry standard to measure fan and blower pressures, filter resistance, air velocity, furnace draft, pressure drop across orifice plates, liquid levels with bubbler systems and pressures in fluid amplifier or fluidic systems. It also checks gas-air ratio controls and automatic valves, and monitors blood and respiratory pressures in medical care equipment.

Note: May be used with Hydrogen. When ordering a Buna-N diaphragm pressures must be less than 35 psi.

MOUNTING. A single case size is used for most models of Magnehelic® gages. They can be flush or surface mounted with standard hardware supplied. With the optional **A-610** Pipe Mounting Kit they may be conveniently installed on horizontal or vertical 1-1/4" - 2" pipe. Although calibrated for vertical position, many ranges above 1" may be used at any angle by simply re-zeroing. However, for maximum accuracy, they must be calibrated in the same position in which they are used. These characteristics make Magnehelic® gages ideal for both stationary and portable applications. A 4-9/16" hole is required for flush panel mounting. Complete mounting and connection fittings plus instructions are furnished with each instrument.

Flush ...Surface...or Pipe Mounted

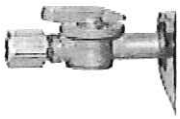

VENT VALVES

In applications where pressure is continuous and the Magnehelic® gage is connected by metal or plastic tubing which cannot be easily removed, we suggest using Dwyer A-310A vent valves to connect gage. Pressure can then be removed to check or re-zero the gage.

HIGH AND MEDIUM PRESSURE MODELS

Installation is similar to standard gages except that a 4-13/16" hole is needed for flush mounting. The medium pressure construction is rated for internal pressures up to 35 psig and the high pressure up to 80 psig. Available for all models. Because of larger case, the medium pressure and high pressure models will not fit in a portable case size. Installation of the A-321 safety relief valve on standard Magnehelic® gages often provides adequate protection against infrequent overpressure.

SPECIFICATIONS

Service: Air and non-combustible, compatible gases. (Natural Gas option available.)
Wetted Materials: Consult factory.
Housing: Die cast aluminum case and bezel, with acrylic cover. Exterior finish is coated gray to withstand 168 hour salt spray corrosion test.
Accuracy: ±2% of full scale (±3% on - 0, -100 Pa, -125 Pa, 10MM and ±4% on - 00, -60 Pa, -6MM ranges), throughout range at 70°F (21.1°C).
Pressure Limits: -20" Hg. to 15 psig.† (-0.677 bar to 1.034 bar); MP option: 35 psig (2.41 bar), HP option: 80 psig (5.52 bar).
Overpressure: Relief plug opens at approximately 25 psig (1.72 bar), standard gages only.
Temperature Limits: 20 to 140°F.* (-6.67 to 60°C).
Size: 4" (101.6 mm) Diameter dial face.
Mounting Orientation: Diaphragm in vertical position. Consult factory for other position orientations.
Process Connections: 1/8" female NPT duplicate high and low pressure taps - one pair side and one pair back.
Weight: 1 lb 2 oz (510 g), MP & HP 2 lb 2 oz (963 g).
Standard Accessories: Two 1/8" NPT plugs for duplicate pressure taps, two 1/8" pipe thread to rubber tubing adapter and three flush mounting adapters with screws. (Mounting and snap ring retainer substituted for 3 adapters in MP & HP gage accessories.)
*Low temperature models available as special option.
†For applications with high cycle rate within gage total pressure rating, next higher rating is recommended. See Medium and High pressure options at lower left.

OPTIONS AND ACCESSORIES

Transparent Overlays
Furnished in red and green to highlight and emphasize critical pressures.

Adjustable Signal Flag
Integral with plastic gage cover. Available for most models except those with medium or high pressure construction. Can be ordered with gage or separate.

LED Setpoint Indicator
Bright red LED on right of scale shows when setpoint is reached. Field adjustable from gage face, unit operates on 12-24 VDC. Requires MP or HP style cover and bezel.

A-432 Portable Kit
Combine carrying case with any Magnehelic® gage of standard range, except high pressure connection. Includes 9 ft (2.7 m) of 3/16" I.D. rubber tubing, standhang bracket and terminal tube with holder.

A-605 Air Filter Gage Accessory Kit
Adapts any standard Magnehelic® gage for use as an air filter gage. Includes aluminum surface mounting bracket with screws, two 5 ft (1.5 m) lengths of 1/4" aluminum tubing two static pressure tips and two molded plastic vent valves, integral compression fittings on both tips and valves.

Quality design and construction features

Bezel provides flange for flush mounting in panel.

Clear plastic face is highly resistant to breakage. Provides undistorted viewing of pointer and scale.

Precision litho-printed scale is accurate and easy to read.

Red tipped pointer of heat treated aluminum tubing is easy to see. It is rigidly mounted on the helix shaft.

Pointer stops of molded rubber prevent pointer over-travel without damage.

"Wishbone" assembly provides mounting for helix, helix bearings and pointer shaft.

Jeweled bearings are shock-resistant mounted; provide virtually friction-free motion for helix. Motion damped with high viscosity silicone fluid.

Zero adjustment screw is conveniently located in the plastic cover, and is accessible without removing cover. O-ring seal provides pressure tightness.

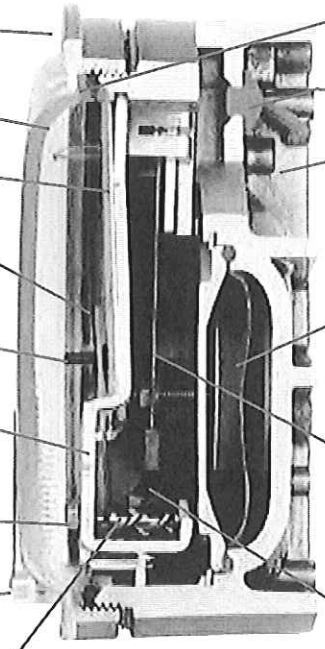

O-ring seal for cover assures pressure integrity of case.

Blowout plug of silicone rubber protects against overpressure on 15 psig rated models. Opens at approximately 25 psig.

Die cast aluminum case is precision made and iridite-dipped to withstand 168 hour salt spray corrosion test. Exterior finished in baked dark gray hammerloid. One case size is used for all standard pressure options, and for both surface and flush mounting.

Silicone rubber diaphragm with integrally molded O-ring is supported by front and rear plates. It is locked and sealed in position with a sealing plate and retaining ring. Diaphragm motion is restricted to prevent damage due to overpressures.

Calibrated range spring is flat spring steel. Small amplitude of motion assures consistency and long life. It reacts to pressure on diaphragm. Live length adjustable for calibration.

Samarium Cobalt magnet mounted at one end of range spring rotates helix without mechanical linkages.

Helix is precision made from an alloy of high magnetic permeability. Mounted in jeweled bearings, it turns freely, following the magnetic field to move the pointer across the scale.

SERIES 2000 MAGNEHELIC® GAGE — MODELS AND RANGES

The models below will fulfill most requirements. Page V also shows examples of special models built for OEM customers. For special scales furnished in ounces per square inch, inches of mercury, metric units, etc., contact the factory.

Dual Scale English/Metric Models		
Model Number	Range, In. W.C.	Range, Pa or kPa
2000-OD	0-0.5	0-125 Pa
2001D	0-1.0	0-250 Pa
2002D	0-2.0	0-500 Pa
2003D	0-3.0	0-750 Pa
2004D	0-4.0	0-1.0 kPa
2006D	0-6.0	0-1.5 kPa
2008D	0-8.0	0-2.0 kPa
2010D	0-10	0-2.5 kPa

Model Number	Range Inches of Water
2000-00N†••	.05-0-.2
2000-00†••	0-.25
2000-0†•	0-.50
2001	0-1.0
2002	0-2.0
2003	0-3.0
2004	0-4.0
2005	0-5.0
2006	0-6.0
2008	0-8.0
2010	0-10
2015	0-15
2020	0-20
2025	0-25
2030	0-30
2040	0-40
2050	0-50
2060	0-60
2080	0-80
2100	0-100
2150	0-150

Model Number	Range Zero Center Inches of Water
2300-0†•	.25-0-.25
2301	.5-0-.5
2302	1-0-1
2304	2-0-2
2310	5-0-5
2320	10-0-10
2330	15-0-15

Model Number	Range PSI
2201	0-1
2202	0-2
2203	0-3
2204	0-4
2205	0-5
2210*	0-10
2215*	0-15
2220*	0-20
2230**	0-30

*MP option standard
**HP option standard

Dual Scale Air Velocity Units

Model Number	Range in W.C. Velocity, F.P.M.
2000-00AV†••	0-.25/300-2000
2000-0AV†•	0-.50/500-2800
2001AV	0-1.0/500-4000
2002AV	0-2.0/1000-5600
2010AV	0-10/2000-12500

For use with pitot tube.

Model Number	Range MM of Water
2000-6MM†••	0-6
2000-10MM†•	0-10
2000-25MM	0-25
2000-50MM	0-50
2000-80MM	0-80
2000-100MM	0-100
Zero Center Ranges	
2300-20MM†	10-0-10

Model Number	Range, CM of Water
2000-15CM	0-15
2000-20CM	0-20
2000-25CM	0-25
2000-50CM	0-50
2000-80CM	0-80
2000-100CM	0-100
2000-150CM	0-150
2000-200CM	0-200
2000-250CM	0-250
2000-300CM	0-300
Zero Center Ranges	
2300-4CM	2-0-2
2300-10CM	5-0-5
2300-30CM	15-0-15

Model Number	Range, Pascals
2000-60PA†••	0-60
2000-100PA†•	0-100
2000-125PA†•	0-125
2000-250PA	0-250
2000-300PA	0-300
2000-500PA	0-500
2000-750PA	0-750

Model Number	Range, Pascals
Zero Center Ranges	
2300-60PA	30-0-30
2300-100PA	50-0-50
2300-120PA	60-0-60
2300-250PA	125-0-125
2300-500PA	250-0-250

Model Number	Range, Kilopascals
2000-1KPA	0-1
2000-1.5KPA	0-1.5
2000-2KPA	0-2
2000-3KPA	0-3
2000-4KPA	0-4
2000-5KPA	0-5
2000-8KPA	0-8
2000-10KPA	0-10
2000-15KPA	0-15
2000-20KPA	0-20
2000-25KPA	0-25
2000-30KPA	0-30
Zero Center Ranges	
2300-1KPA	.5-0-.5
2300-3KPA	1.5-0-1.5

Accessories
A-299, Surface Mounting Bracket
A-300, Flat Flush Mounting Bracket
A-310A, 3-Way Vent Valve
A-321, Safety Relief Valve
A-432, Portable Kit
A-605, Air Filter Kit
A-610, Pipe Mount Kit

Options — To order, add suffix: I.E. 2001-ASF
ASF (Adjustable Signal Flag)
HP (High Pressure Option)
LT (Low Temperatures to -20°F)
MP (Med. Pressure Option)
SP (Setpoint Indicator)

Scale Overlays — Red, Green, Mirrored or Combination, Specify Locations

†These ranges calibrated for vertical scale position.
• Accuracy +/-3%. •• Accuracy +/-4%

1011R01-0298P

ENERGY COST INDEX ★★★★★

30/30®

High-Capacity MERV 8 Pleated Panel Filter

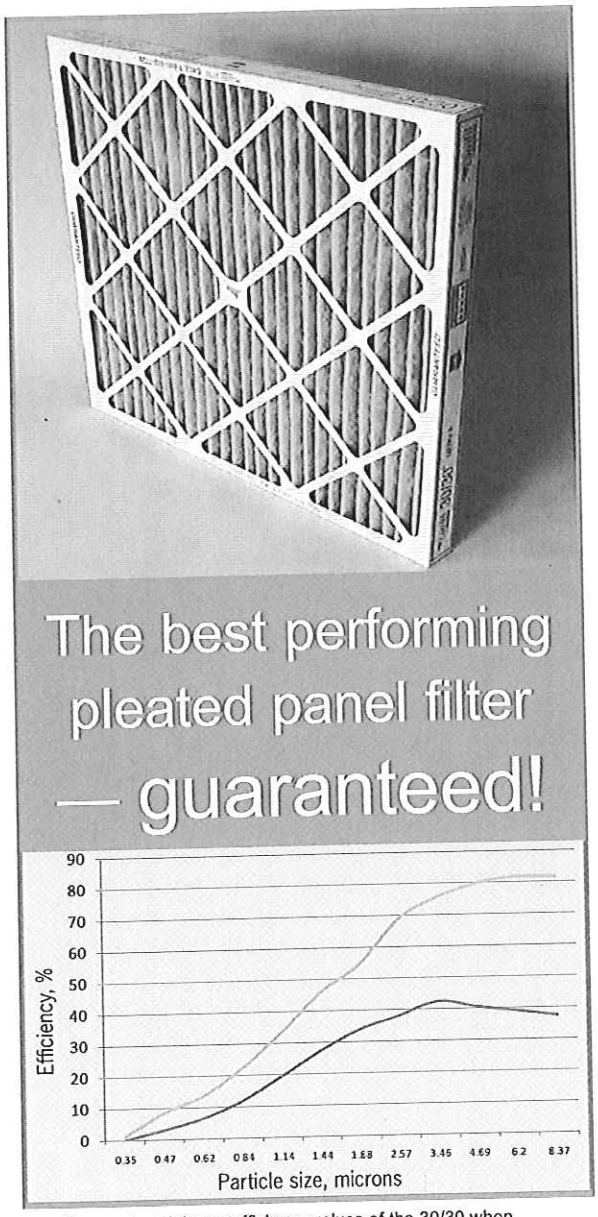

Composite minimum efficiency values of the 30/30 when evaluated per ASHRAE Standard 52.2-2007. The 30/30 has a MERV of 8 and MERV-A of 8 when tested per appendix J.
This line is representative of a MERV 8 filter that uses electret media enhancement to obtain a MERV 8. The values are after approximately two weeks of operation.

The Camfil Farr 30/30 has set the industry standard for pleated panel filters since 1963. With over 45 design enhancements, it continues to provide the industry's best value for medium efficiency filtration.

Setting the standard by which other pleated filters are judged, modern media manufacturing techniques and proprietary technological advancements ensure that the Camfil Farr 30/30 is:

- *Guaranteed to perform at the rated efficiency, or better, throughout the life of the filter.*
- *Guaranteed to last longer than any other pleated panel filter available.*

LASTS LONGER
Product Performance Guaranteed
LIFETIME EFFICIENCY

Performing at MERV 8, using a mechanical particle capture principle, the 30/30 will not drop in efficiency while in service as will other pleated panel filters that incorporate an electret charge to obtain a MERV 8 value.

Its radial pleat design provides the longest life and lowest average pressure drop reducing the number of filter changes so your facility will use less fan power to move air through the filter.

The high wet-strength beverage frame and welded wire media backing provide structural integrity in any type of HVAC application virtually eliminating the additional costs associated with filter bypass or filter failure.

Available in 1", 2" or 4" deep configurations, the 30/30 is ideal for commercial, industrial, institutional or any other application where the ultimate level of protection of equipment and indoor air quality is a concern.

The Camfil Farr 30/30 has an Energy Cost Index (ECI) of five stars, the highest performance rating available.

[1] A 5-star rating indicates that this filter performs in the top 20% of all products of similar construction in the HVAC industry. Factors of consideration include maintained efficiency, energy usage and resistance to air flow. Detailed evaluation information is available from your Camfil Farr sales outlet or on the web at www.camfilfarr.com.

camfil FARR

Camfil Farr	Product Sheet
30/30®	1002 - 0608
Camfil Farr - clean air solutions	

Camfil Farr 30/30®

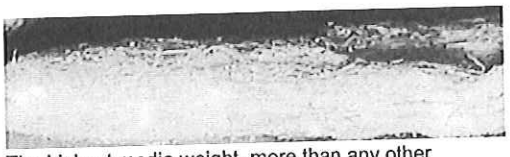

The highest media weight, more than any other pleated panel filter, and uniform lofting for high dust holding capacity, ensure that the 30/30 will last longer in any HVAC application.

Exclusive MERV 8 Performance from Camfil Farr Media

The 30/30 media is manufactured from a proprietary blend of fibers that incorporate a mechanical principle of particle capture. The filter does not require an electret charge which would dissipate and reduce filter's efficiency after minimal hours of operation in a system. The media is lofted to a uniform depth to enhance the depth-loading characteristic and ensure the longest life of any pleated filter available. The high-loft also offers a lower resistance to airflow so fan horsepower required to move air through the filter is minimized. Camfil Farr evaluates the quality of all incoming raw materials to maintain product integrity as part of a rigorous quality control program.

Welded Wire Grid Maintains Radial Pleat Design

The media is formed into a radial pleat for uniform dust loading and full use of the media area. V-style pleats blind while loading preventing full utilization of the media area and increasing the filters pressure drop resulting in increased energy usage. A welded wire grid, spot welded on one-inch centers maintains each radial pleat and maintains media stability through varying airflows.

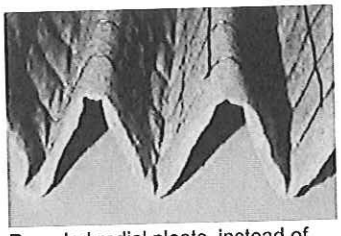

Rounded radial pleats, instead of v-shape pleats, allow full usage of media area.

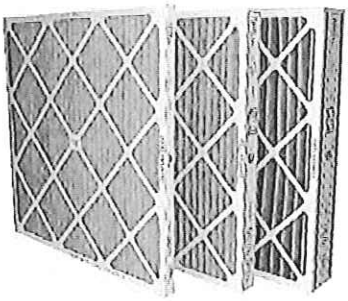

Diagonal support members, glued to each pleat at its apex, helps maintain pleat stability and filter rigidity.

High Wet-Strength Beverage Board Frame

The high wet-strength beverage board frame, the thickest board in the industry, creates a stable and non-yielding media pack. Filter bypass is virtually eliminated because the filter fits securely in the filter holding mechanism. The media is bonded to the frame ensuring that all of the air seen by the filter will be treated by the filter. Diagonal support members are bonded to each pleat to maintain pleat spacing and add stability to the pack through bridge-style engineering. The 30/30 is guaranteed to 2.0" w.g. of pressure filter without failure. Costly filter blowouts and compromising of HVAC system cleanliness is eliminated.

ISO 9001:2000 Certified Quality Control

Every 30/30 filter is identified on the frame with a unique manufacturing code that allows us to analyze every component of construction from raw materials to the point where the product is boxed for shipping. Filters are inspected for structural integrity so they are capable of operating in the harshest HVAC system conditions. The adhesiveness of diagonal support members to pleat apexes is inspected so pleat spacing is uniform to provide longer filter life. Each media lot is laboratory tested to confirm consistent performance and individual filters are submitted from each manufacturing facility on a strict schedule for ASHRAE 52.2 testing in our world-class testing facility.

The standard of the industry, by Camfil Farr.

Used in many systems as a prefilter, the 30/30 extends the life of final filters by capturing larger contaminant and thereby allowing the final filters to concentrate on moving smaller particles such as those that are respirable and can cause lung damage. The 30/30 is also an excellent choice when applied as the only filter in a system to keep coils clean and maintain efficiency, and protect building occupants from contaminants of annoyance such as pollen, plant spores, atmospheric dusts and other indoor air irritants.

Unprecedented Industry Guarantee

If our filters don't outlast and outperform your current filters, we'll replace them, FREE.
For guarantee details and a distributor list, visit www.camfilfarr.com.

2" Deep Filter (actual filter depth 1.75")

Part Number	Nominal Size (inches)	Actual Size (inches)				Initial Resistance (inches w.g.)	Total Media Area (sq. ft.)	Pleats per Linear Foot
		Height	Width	Depth	High			
049880-019	16 x 16 x 2	15.50	15.50	1.75	890	0.31	7.8	15 pleats per linear foot
049880-008	20 x 10 x 2	19.50	9.50		700		6.0	
049880-009	20 x 14 x 2	19.50	13.50		975		8.3	
049880-007	20 x 12 x 2	19.50	11.88		835		7.4	
049880-011	20 x 15 x 2	19.50	14.50		1045		9.3	
049880-001	20 x 16 x 2	19.50	15.50		1100		9.9	
049880-013	20 x 18 x 2	19.50	17.50		1250		10.8	
049880-002	20 x 20 x 2	19.50	19.50		1390		11.9	
402271-007	20 x 30 x 2	19.50	29.50		2085		18.2	
049880-006	24 x 12 x 2	23.38	11.38		1000		8.4	
049880-015	24 x 18 x 2	23.50	17.50		1500		13.0	
049880-012	24 x 20 x 2	23.50	19.50		1670		14.3	
049880-005	24 x 24 x 2	23.38	23.38		2000		17.3	
049880-010	25 x 14 x 2	24.50	13.50		1220		10.4	
049880-020	25 x 15 x 2	24.50	14.50		1300		11.6	
049880-016	24 x 16 x 2	24.50	15.50		1335		11.8	
049880-004	25 x 16 x 2	24.50	15.50		1390		12.4	
049880-014	25 x 18 x 2	24.50	17.50		1565		13.5	
049880-003	25 x 20 x 2	24.50	19.50		1740		14.9	
049880-018	25 x 25 x 2	24.50	24.50		2170		19	

1" Deep Filter (actual filter depth 0.88")

Part Number	Nominal Size (inches)	Actual Size (inches)			Airflow Capacity (cfm)	Initial Resistance (inches w.g.)	Total Media Area (sq. ft.)	Pleats per Linear Foot
		Height	Width	Depth				
054862-018	10 x 10 x 1	9.50	9.50	0.88	240	0.23	1.6	16 pleats per linear foot
054862-025	12 x 12 x 1	11.50	11.50		350		2.5	
054862-027	16 x 12 x 1	15.50	11.50		470		3.3	
054862-012	16 x 16 x 1	15.50	15.50		620		4.3	
054862-009	20 x 7 x 1	19.50	6.50		340		2.4	
054862-016	20 x 10 x 1	19.50	9.50		490		3.3	
054862-019	20 x 12 x1	19.50	11.50		580		4.1	
054862-006	20 x 14 x 1	19.50	13.50		680		4.6	
054862-008	20 x 15 x 1	19.50	14.50		730		5.1	
054862-001	20 x 16 x 1	19.50	15.50		780		5.4	
054862-020	20 x 18 x 1	19.50	17.50		880		6.1	
054862-002	20 x 20 x 1	19.50	19.50		970		6.6	
054862-021	22 x 22 x 1	21.50	21.50		1180		8.2	
054862-022	24 x 10 x 1	23.50	9.50		580		4.0	
054862-010	24 x 12 x 1	23.50	11.50		700		4.9	
054862-026	24 x 14 x 1	23.50	13.50		820		5.5	
054862-015	24 x 16 x 1	23.50	15.50		970		6.7	
054862-028	24 x 18 x 1	23.50	17.50		1050		7.3	
054862-011	24 x 20 x 1	23.50	19.50		1165		8.0	
054862-005	24 x 24 x 1	23.50	23.50		1400		9.8	
054862-023	25 x 10 x 1	24.50	9.50		610		4.1	
054862-024	25 x 12 x 1	24.50	11.50		730		5.2	
054862-007	25 x 14 x 1	24.50	13.50		850		5.7	
054862-013	25 x 15 x 1	24.50	14.50		910		6.4	
054862-004	25 x 16 x 1	24.50	15.50		970		6.7	
054862-017	25 x 18 x 1	24.50	17.50		1100		7.6	
054862-003	25 x 20 x 1	24.50	19.50		1215		8.3	
054862-014	25 x 25 x 1	24.50	24.50		1520		10.5	

Data Notes:
1.0" w.g. recommended final resistance for all depths. System design may dictate an alternative changeout point. Contact factory for guidance.
Has been qualified by Underwriters Laboratories as UL Class 2.
Maximum operating temperature 200° F (93° C).
2" and 4" deep filters rated at 250 feet per minute (fpm) medium and 500 fpm high. 1" deep filter's rated at 175 fpm medium and 350 fpm high.
For product specification in RTF format please go to www.camfilfarr.com.

4" Deep Filter (actual filter depth 3.75")

Part Number	Nominal Size (inches)	Actual Size (inches)			Airflow Capacity (cfm)	Initial Resistance (inches w.g.)	Total Media Area (sq. ft.)	Pleats per Linear Foot
		Height	Width	Depth				
059413-004	20 x 16 x 4	19.38	15.38	3.75	1100	0.27	15.7	11 pleats per linear foot
059413-003	20 x 20 x 4	19.38	19.38		1390		18.9	
059413-002	24 x 12 x 4	23.38	11.38		1000		13.9	
059413-009	24 x 18 x 4	23.38	17.38		1500		20.2	
059413-008	24 x 20 x 4	23.38	19.38		1670		22.7	
059413-001	24 x 24 x 4	23.38	23.38		2000		27.7	
059413-005	25 x 16 x 4	24.38	15.38		1390		19.7	
059413-006	25 x 20 x 4	24.38	19.38		1740		23.6	
059413-010	25 x 25 x 4	24.38	24.38		2170		30.0	
059413-007	25 x 29 x 4	24.38	28.38		2520		35.4	

Data Notes:
1.0" w.g. recommended final resistance for all depths. System design may dictate an alternative changeout point. Contact factory for guidance.
30/30 has been qualified by Underwriters Laboratories as UL Class 2.
Maximum operating temperature 200° F (93° C).
2" and 4" deep filters are rated at 250 feet per minute (fpm) medium and 500 fpm high. 1" deep filters are rated at 175 fpm medium and 350 fpm high.

4" deep 30/30 is available with a header for side-access housing installation. Request Product Sheet 1003.

Available in UL Class One for locations having this building code requirement. Request Product Sheet 1002CL1.

1.0 General

1.1 - Air filters shall be medium efficiency ASHRAE pleated panels consisting of cotton and synthetic media, welded wire media support grid, and beverage board enclosing frame.

1.2 - Sizes shall be noted on drawings or other supporting materials.

2.0 Construction

2.1 - Filter media shall be a cotton and synthetic blend, lofted to a uniform depth of 0.15", and formed into a uniform radial pleat.

2.2 - A welded wire grid, spot-welded on one-inch centers and treated for corrosion resistance shall be bonded to the downstream side of the media to maintain radial pleats and prevent media oscillation.

2.3 - An enclosing frame of no less than 28-point high wet-strength beverage board shall provide a rigid and durable enclosure. The frame shall be bonded to the media on all sides to prevent air bypass. Integral diagonal support members on the air entering and air exiting side shall be bonded to the apex of each pleat to maintain uniform pleat spacing in varying airflows.

3.0 Performance

3.1 - The filter shall have a Minimum Efficiency Reporting Value of MERV 8 when evaluated under the guidelines of ASHRAE Standard 52.2-2007. It shall also have a MERV-A of 8 when tested per Appendix J of the same standard. The media shall maintain or increase in efficiency over the life of the filter.

3.2 - Initial resistance to airflow shall not exceed 0.31" for a 2" deep, 0.23" for a 1" deep, or 0.27" for a 4" deep filter at respective velocities of 500, 350 or 500 fpm.

3.3 - The filter shall be classified by Underwriters Laboratories as UL Class 2.

3.4 - Manufacturer shall guarantee the integrity of the filter pack to 2.0" w.g.

3.5 - Manufacturer shall provide evidence of facility certification to ISO 9001:2000.

Supporting Data - Provide product laboratory test report for each depth listed including all details as prescribed in ASHRAE Standard 52.2-2007 including appendix J.

Camfil Farr has a policy of uninterrupted research, development and product improvement. We reserve the right to change designs and specifications without notice.

Camfil Farr, Inc.
United States Tel: (973) 616-7300 Fax: (973) 616-7771
Canada Tel: (450) 629-3030 Fax: (450) 662-6035
E-mail: camfilfarr@camfilfarr.com

© Camfil Farr http://www.camfilfarr.com

LASTS LONGER Product Performance Guaranteed LIFETIME EFFICIENCY

ENERGY COST INDEX

camfil FARR Certified Quality System ISO 9001:2000

30/30®

Initial Resistance Versus Airflow

Final resistance (maximum recommended) is 1.0" w.g. (250 Pa).
System design may dictate a lower change out point.
Maximum continuous operating temperature 180° F (82° C).
Consult factory before operating in dotted line region.

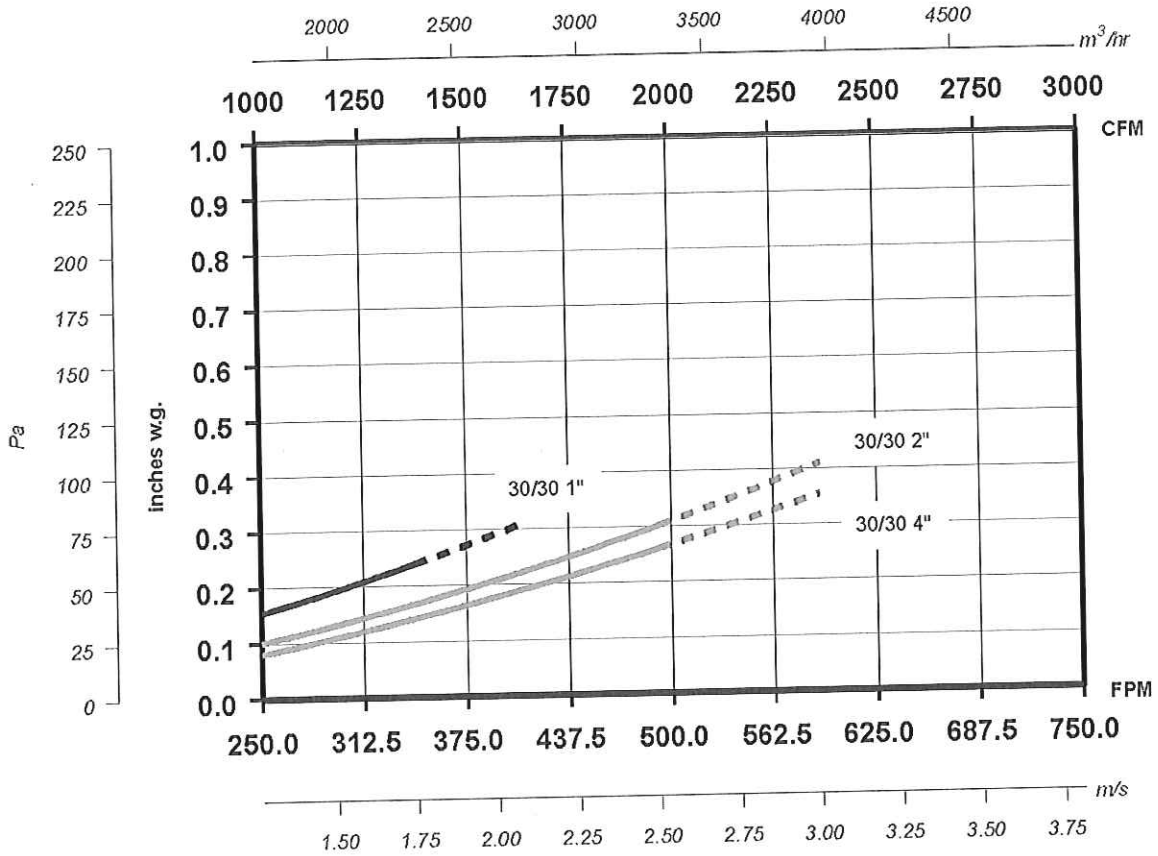

Camfil Farr	Technical Data
30/30®	1002-IRVA- 0408
Camfil Farr - clean air solutions	

© Camfil Farr

Series 2000

Magnehelic® Differential Pressure Gages

Indicate Positive, Negative or Differential, Accurate within 2%

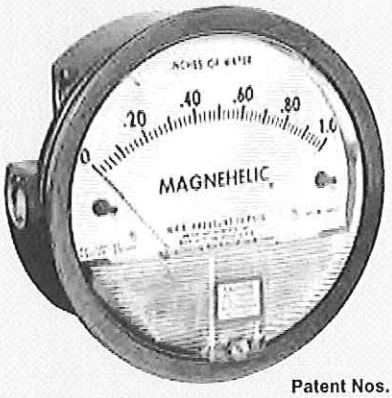

Patent Nos. 4,030,365
5,012,678

Standard Magnehelic® Pressure Gage has a large, easy-to-read 4" dial.

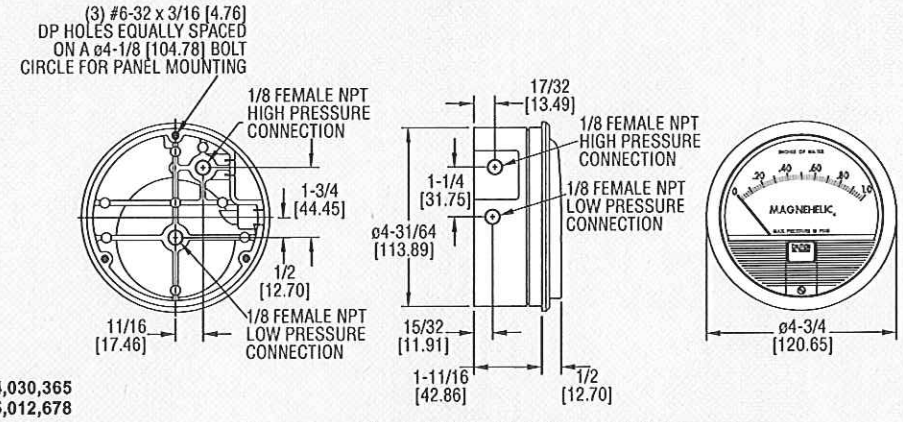

Dimensions, Standard Series 2000 Magnehelic® Pressure Gages. (Slightly different on medium and high pressure models)

Select the Dwyer® Magnehelic® gage for high accuracy – guaranteed within 2% of full scale – and for the wide choice of 81 models available to suit your needs precisely. Using Dwyer's simple, frictionless Magnehelic® gage movement, it quickly indicates low air or non-corrosive gas pressures – either positive, negative (vacuum) or differential. The design resists shock, vibration and over-pressures. No manometer fluid to evaporate, freeze or cause toxic or leveling problems. It's inexpensive, too.

The Magnehelic® gage is the industry standard to measure fan and blower pressures, filter resistance, air velocity, furnace draft, pressure drop across orifice plates, liquid levels with bubbler systems and pressures in fluid amplifier or fluidic systems. It also checks gas-air ratio controls and automatic valves, and monitors blood and respiratory pressures in medical care equipment.

Note: May be used with Hydrogen. When ordering a Buna-N diaphragm pressures must be less than 35 psi.

MOUNTING. A single case size is used for most models of Magnehelic® gages. They can be flush or surface mounted with standard hardware supplied. With the optional **A-610** Pipe Mounting Kit they may be conveniently installed on horizontal or vertical 1-1/4" - 2" pipe. Although calibrated for vertical position, many ranges above 1" may be used at any angle by simply re-zeroing. However, for maximum accuracy, they must be calibrated in the same position in which they are used. These characteristics make Magnehelic® gages ideal for both stationary and portable applications. A 4-9/16" hole is required for flush panel mounting. Complete mounting and connection fittings plus instructions are furnished with each instrument.

Flush ...Surface...or Pipe Mounted

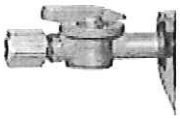

VENT VALVES

In applications where pressure is continuous and the Magnehelic® gage is connected by metal or plastic tubing which cannot be easily removed, we suggest using Dwyer A-310A vent valves to connect gage. Pressure can then be removed to check or re-zero the gage.

HIGH AND MEDIUM PRESSURE MODELS

Installation is similar to standard gages except that a 4-13/16" hole is needed for flush mounting. The medium pressure construction is rated for internal pressures up to 35 psig and the high pressure up to 80 psig. Available for all models. Because of larger case, the medium pressure and high pressure models will not fit in a portable case size. Installation of the A-321 safety relief valve on standard Magnehelic® gages often provides adequate protection against infrequent overpressure.

SPECIFICATIONS

Service: Air and non-combustible, compatible gases. (Natural Gas option available.)
Wetted Materials: Consult factory.
Housing: Die cast aluminum case and bezel, with acrylic cover. Exterior finish is coated gray to withstand 168 hour salt spray corrosion test.
Accuracy: ±2% of full scale (±3% on - 0, -100 Pa, -125 Pa, 10MM and ±4% on - 00, -60 Pa, -6MM ranges), throughout range at 70°F (21.1°C).
Pressure Limits: -20" Hg. to 15 psig.† (-0.677 bar to 1.034 bar); MP option: 35 psig (2.41 bar), HP option: 80 psig (5.52 bar).
Overpressure: Relief plug opens at approximately 25 psig (1.72 bar), standard gages only.
Temperature Limits: 20 to 140°F.* (-6.67 to 60°C).
Size: 4" (101.6 mm) Diameter dial face.
Mounting Orientation: Diaphragm in vertical position. Consult factory for other position orientations.
Process Connections: 1/8" female NPT duplicate high and low pressure taps - one pair side and one pair back.
Weight: 1 lb 2 oz (510 g), MP & HP 2 lb 2 oz (963 g).
Standard Accessories: Two 1/8" NPT plugs for duplicate pressure taps, two 1/8" pipe thread to rubber tubing adapter and three flush mounting adapters with screws. (Mounting and snap ring retainer substituted for 3 adapters in MP & HP gage accessories.)
*Low temperature models available as special option.
†For applications with high cycle rate within gage total pressure rating, next higher rating is recommended. See Medium and High pressure options at lower left.

OPTIONS AND ACCESSORIES

Transparent Overlays
Furnished in red and green to highlight and emphasize critical pressures.

Adjustable Signal Flag
Integral with plastic gage cover. Available for most models except those with medium or high pressure construction. Can be ordered with gage or separate.

LED Setpoint Indicator
Bright red LED on right of scale shows when setpoint is reached. Field adjustable from gage face, unit operates on 12-24 VDC. Requires MP or HP style cover and bezel.

A-432 Portable Kit
Combine carrying case with any Magnehelic® gage of standard range, except high pressure connection. Includes 9 ft (2.7 m) of 3/16" I.D. rubber tubing, standhang bracket and terminal tube with holder.

A-605 Air Filter Gage Accessory Kit
Adapts any standard Magnehelic® gage for use as an air filter gage. Includes aluminum surface mounting bracket with screws, two 5 ft (1.5 m) lengths of 1/4" aluminum tubing two static pressure tips and two molded plastic vent valves, integral compression fittings on both tips and valves.

Quality design and construction features

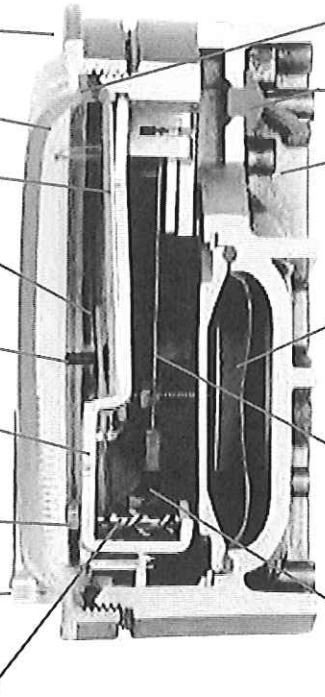

Bezel provides flange for flush mounting in panel.

Clear plastic face is highly resistant to breakage. Provides undistorted viewing of pointer and scale.

Precision litho-printed scale is accurate and easy to read.

Red tipped pointer of heat treated aluminum tubing is easy to see. It is rigidly mounted on the helix shaft.

Pointer stops of molded rubber prevent pointer over-travel without damage.

"Wishbone" assembly provides mounting for helix, helix bearings and pointer shaft.

Jeweled bearings are shock-resistant mounted; provide virtually friction-free motion for helix. Motion damped with high viscosity silicone fluid.

Zero adjustment screw is conveniently located in the plastic cover, and is accessible without removing cover. O-ring seal provides pressure tightness.

O-ring seal for cover assures pressure integrity of case.

Blowout plug of silicone rubber protects against overpressure on 15 psig rated models. Opens at approximately 25 psig.

Die cast aluminum case is precision made and iridite-dipped to withstand 168 hour salt spray corrosion test. Exterior finished in baked dark gray hammerloid. One case size is used for all standard pressure options, and for both surface and flush mounting.

Silicone rubber diaphragm with integrally molded O-ring is supported by front and rear plates. It is locked and sealed in position with a sealing plate and retaining ring. Diaphragm motion is restricted to prevent damage due to overpressures.

Calibrated range spring is flat spring steel. Small amplitude of motion assures consistency and long life. It reacts to pressure on diaphragm. Live length adjustable for calibration.

Samarium Cobalt magnet mounted at one end of range spring rotates helix without mechanical linkages.

Helix is precision made from an alloy of high magnetic permeability. Mounted in jeweled bearings, it turns freely, following the magnetic field to move the pointer across the scale.

Dual Scale English/Metric Models		
Model Number	Range, In. W.C.	Range, Pa or kPa
2000-OD	0-0.5	0-125 Pa
2001D	0-1.0	0-250 Pa
2002D	0-2.0	0-500 Pa
2003D	0-3.0	0-750 Pa
2004D	0-4.0	0-1.0 kPa
2006D	0-6.0	0-1.5 kPa
2008D	0-8.0	0-2.0 kPa
2010D	0-10	0-2.5 kPa

SERIES 2000 MAGNEHELIC® GAGE — MODELS AND RANGES

The models below will fulfill most requirements. Page V also shows examples of special models built for OEM customers. For special scales furnished in ounces per square inch, inches of mercury, metric units, etc., contact the factory.

Model Number	Range Inches of Water
2000-00N†••	.05-0-.2
2000-00†••	0-.25
2000-0†•	0-.50
2001	0-1.0
2002	0-2.0
2003	0-3.0
2004	0-4.0
2005	0-5.0
2006	0-6.0
2008	0-8.0
2010	0-10
2015	0-15
2020	0-20
2025	0-25
2030	0-30
2040	0-40
2050	0-50
2060	0-60
2080	0-80
2100	0-100
2150	0-150

Model Number	Range Zero Center Inches of Water
2300-0†•	.25-0-.25
2301	.5-0-.5
2302	1-0-1
2304	2-0-2
2310	5-0-5
2320	10-0-10
2330	15-0-15

Model Number	Range PSI
2201	0-1
2202	0-2
2203	0-3
2204	0-4
2205	0-5
2210*	0-10
2215*	0-15
2220*	0-20
2230**	0-30

*MP option standard
**HP option standard

Dual Scale Air Velocity Units

Model Number	Range in W.C. Velocity, F.P.M.
2000-00AV†••	0-.25/300-2000
2000-0AV†•	0-.50/500-2800
2001AV	0-1.0/500-4000
2002AV	0-2.0/1000-5600
2010AV	0-10/2000-12500

For use with pitot tube.

Model Number	Range MM of Water
2000-6MM†••	0-6
2000-10MM†•	0-10
2000-25MM	0-25
2000-50MM	0-50
2000-80MM	0-80
2000-100MM	0-100
Zero Center Ranges	
2300-20MM†	10-0-10

Model Number	Range, CM of Water
2000-15CM	0-15
2000-20CM	0-20
2000-25CM	0-25
2000-50CM	0-50
2000-80CM	0-80
2000-100CM	0-100
2000-150CM	0-150
2000-200CM	0-200
2000-250CM	0-250
2000-300CM	0-300
Zero Center Ranges	
2300-4CM	2-0-2
2300-10CM	5-0-5
2300-30CM	15-0-15

Model Number	Range,Pascals
2000-60PA†••	0-60
2000-100PA†•	0-100
2000-125PA†•	0-125
2000-250PA	0-250
2000-300PA	0-300
2000-500PA	0-500
2000-750PA	0-750

Model Number	Range,Pascals
Zero Center Ranges	
2300-60PA	30-0-30
2300-100PA	50-0-50
2300-120PA	60-0-60
2300-250PA	125-0-125
2300-500PA	250-0-250

Model Number	Range, Kilopascals
2000-1KPA	0-1
2000-1.5KPA	0-1.5
2000-2KPA	0-2
2000-3KPA	0-3
2000-4KPA	0-4
2000-5KPA	0-5
2000-8KPA	0-8
2000-10KPA	0-10
2000-15KPA	0-15
2000-20KPA	0-20
2000-25KPA	0-25
2000-30KPA	0-30
Zero Center Ranges	
2300-1KPA	.5-0-.5
2300-3KPA	1.5-0-1.5

Accessories
A-299, Surface Mounting Bracket
A-300, Flat Flush Mounting Bracket
A-310A, 3-Way Vent Valve
A-321, Safety Relief Valve
A-432, Portable Kit
A-605, Air Filter Kit
A-610, Pipe Mount Kit

Options — To order, add suffix: I.E. 2001-ASF
ASF (Adjustable Signal Flag)
HP (High Pressure Option)
LT (Low Temperatures to -20°F)
MP (Med. Pressure Option)
SP (Setpoint Indicator)

Scale Overlays — Red, Green, Mirrored or Combination, Specify Locations

†These ranges calibrated for vertical scale position.
• Accuracy +/-3%. •• Accuracy +/-4%

1011R01-0298P

custom air solutions
by Cambridgeport

Warranty

Custom Air Solutions shall warrant the equipment, parts and workmanship for a period of one (1) year from the date of unit start-up, or eighteen months from the unit shipping date, whichever comes first. Replacement parts shall be provided as required to ensure proper unit operation.

Excluded under this warranty are consumable items such as filters, belts, fuses, refrigerant, and any labor charges; whether they are for troubleshooting, installation of parts, maintenance or recalibration after start-up. Please refer to enclosed vendor literature for further component operation and maintenance.

Any addition(s) and/ or modification(s) to the unit after shipment will automatically void this warranty.

OCS

A Next Generation OCS

XL Series OCS

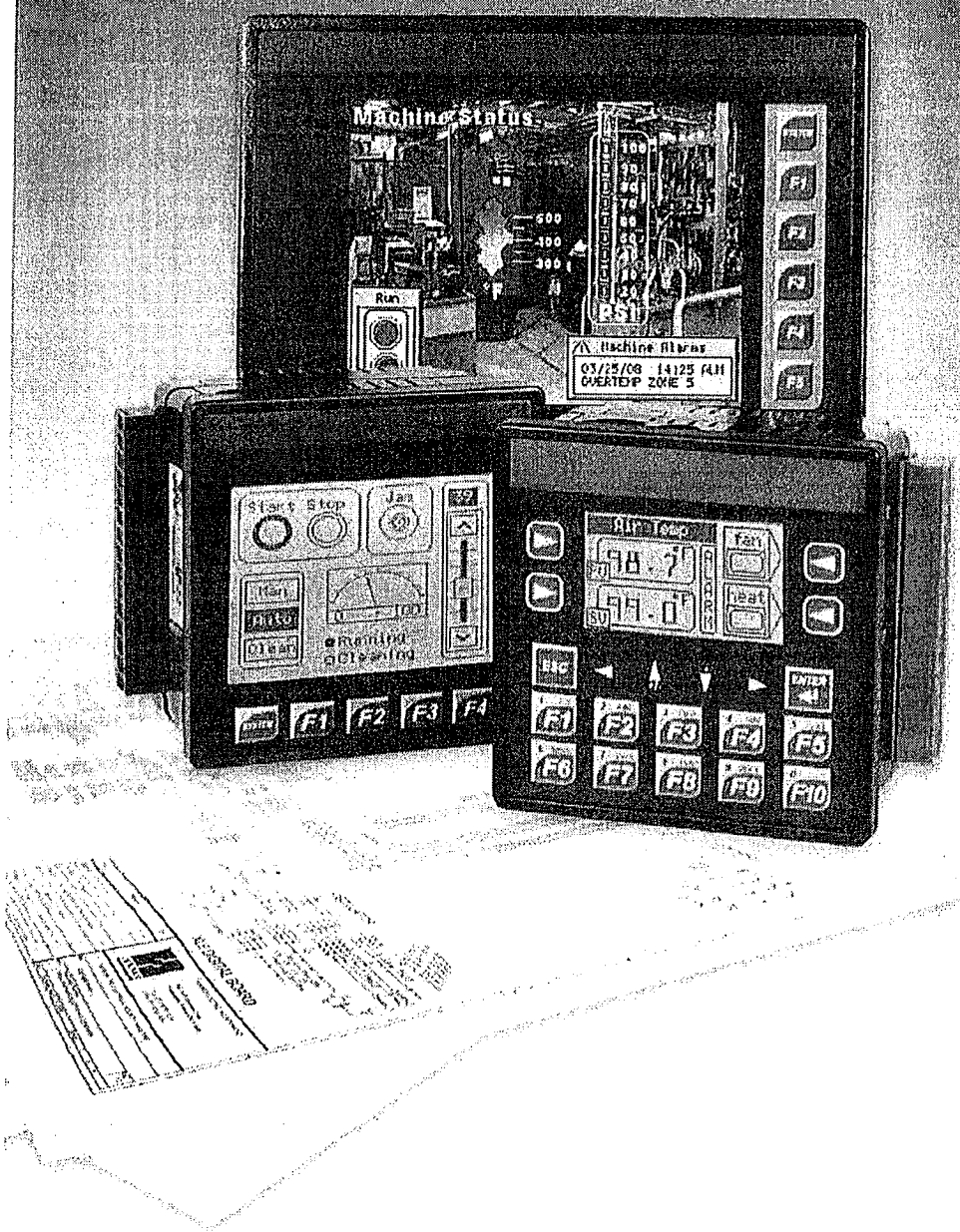

Compact All-in-One Control Solutions with Controller, Graphics, Built-in I/O, Networking and Removable Mass Storage for Industrial Applications

HORNER APG

25 Years of Innovation

New Low-Cost Compact "All-in-One" Controllers

Introducing the XL Series Operator Control Stations (OCS). Costing less than a PLC and operator interface, these devices include an Operator Interface, Built-in I/O, Networking and Removable Mass Data Storage. OCS is a robust, reliable control product that combines a traditional controller (programmed with ladder logic or IEC language) with an operator interface, I/O and networking into an integrated, all-in-one unit programmed using a single industry-recognized software package called Cscape™.

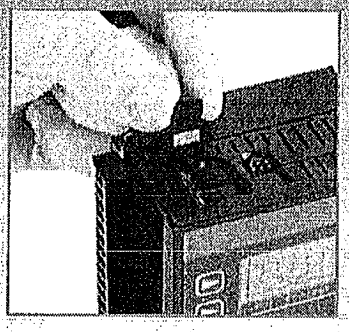

An industry-first! The XL Series can store data or easily upload programs via MicroSD™ memory card.

First with MicroSD™ Data Storage Memory

The XL Series is the first industrial product to use the latest standard in Removable Mass Storage, MicroSD™. This dime-sized memory, to date only found on video-enabled cellular phones, is available in densities ranging from 128MB to 2GB. This is ideal for data logging, machine recipes and application files and users can easily update their XL Series application program through this memory device.

Graphical LCD Displays, Built-in I/O and Add-on Communications

XL Series offers three graphical display options: 2.25" LCD with a keypad (128 X 64 pixels), 3.5" touch screen (160 X 128 pixels) and 5.7" color touch screen (320 X 240 pixels).

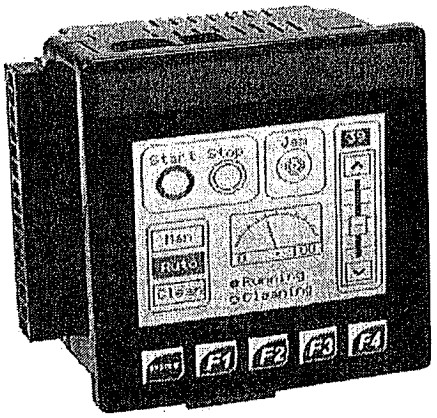

With one single FREE software program, Cscape™, you can easily program, debug and display graphics on any XL Series OCS.

XL Series models with built-in I/O have 22-44 points and include digital, analog and high-speed I/O. Using expansion I/O, the XL Series 256K memory supports over 5000 I/O. For machine control, the built-in high speed I/O can provide totalizing, frequency measurement, PWM generation and pulse outputs. The Universal Analog I/O is ideal for process control applications with high-resolution inputs. They can be configured for Thermocouple, RTD, 4-20mA, +/-100mV, and 0-10V signals.

XL Series models have two RS-232/RS-485 serial ports and an integrated CAN-based network (CsCAN™). The XL6 also adds a USB programming port. Plus, all XL Series models support add-on field installable communications options such as telephone, radio or cell modems. An add-on 10/100MBit Ethernet card makes machine data and programming accessible plant-wide or worldwide – now supporting Modbus/TCP.

Benefits

- More compact and affordable than a separate PLC and Operator Interface
- Operates on 12 VDC and 24 VDC power
- Outdoor-readable or color touch screen displays for better process visualization and machine indication
- Built-in I/O with color-coded, removable terminal blocks with silk screening for easy wiring
- Removable MicroSD™ data storage for data logging and updating programs
- Two serial ports and downloadable protocols that interface with almost any PLC or Drive
- Ethernet, telephone, radio and cell modem option cards

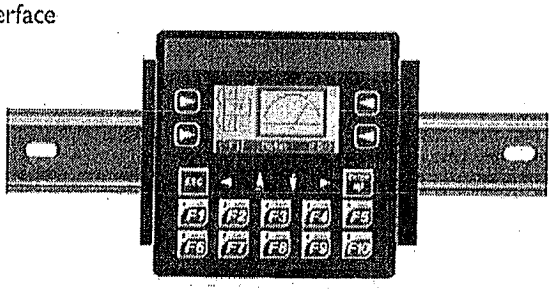

Mounting Options: XLe and XLt can be mounted on DIN rail or in a panel (taking less than 4" H X 4"W X 2.5" D)

Communications Options - Now including Modbus/TCP

The XL Series comes with a wide range of field installable add-on communications options. You can select from the following: 10/100MBit Ethernet, GSM/GPRS cellular, telephone modem and 900MHz radio modem. All options support Cscape™ programming, Modbus master and slave and OPC. Both the 10/100 Ethernet and GSM/GPRS cellular now also support Modbus/TCP slave. A GPS receiver unit is also available for mobile applications.

All communications options are easy to install and come with an extended rear cover to accommodate the option you select.

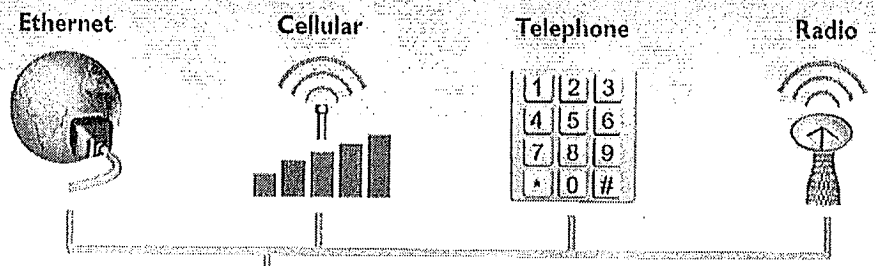

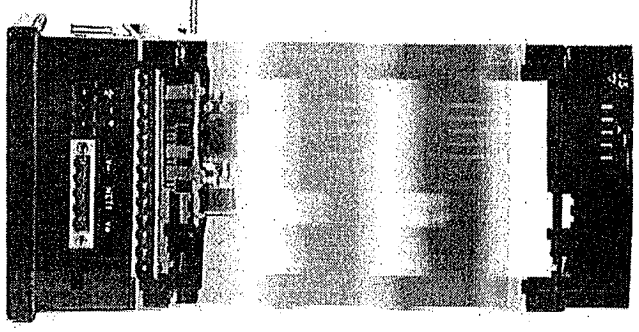

Ethernet and modem cards are easily field-installable. One screwdriver does it. Simply install the card and attach the extended rear cover supplied.

Connectivity

I/O Expansion. XL Series I/O is not limited to its 22-44 built-in I/O. SmartStix I/O connects to the high-speed CsCAN™ network and can be local or highly distributed. RTU/Modbus based SmartMod I/O is a cost effective means of adding specialty or a mix of I/O types.

Architecture. The XL Series supports CsCAN™ high-speed networking as standard and Ethernet networking as an option. Single-point-of-connect allows seamless communications between a computer and all networked controllers. In the diagram below, XLe 2 and XLe 3 are accessed by the PC over Ethernet and CsCAN™ through XLe 1. Through the optional use of Cscape™ EnvisionRV, you can view and access your OCS remotely via a PC interface.

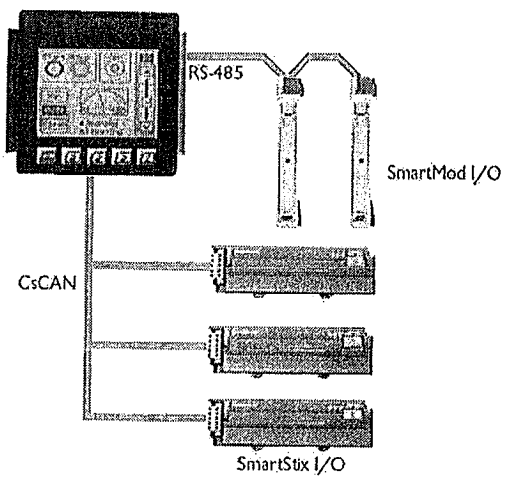

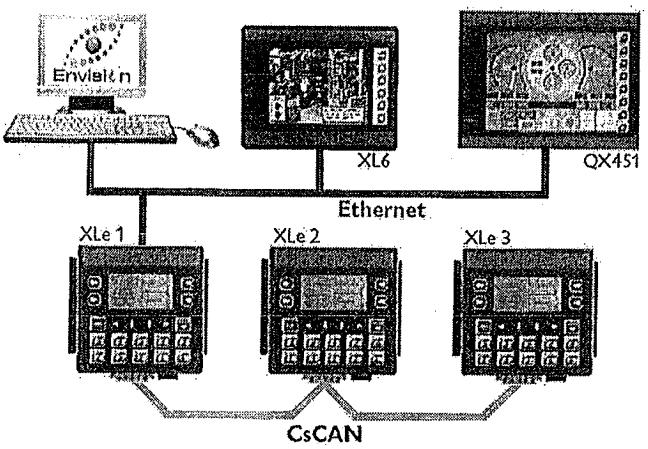

New 5.7" TFT Touch Screen — XL6 OCS

The XL6 Touch Screen controller is Horner's newest addition to the XL Series of Operator Control Stations. XL6 incorporates a 5.7" TFT (thin film transistor) liquid crystal display capable of displaying a palette of 32,000 colors. The result is a photo quality interface that can display elaborately detailed objects and imagery.

As an example, the actual XL6 screen interface below was easily created in Cscape™ by first taking a photograph of the machine area, importing the resulting bitmap into Cscape™ and applying the application objects to the screen in the normal manner.

The XL6 is the first OCS to include a USB programming port that allows you to program the unit directly using a standard USB interface cable, eliminating the need for a USB to serial cable adapter connection.

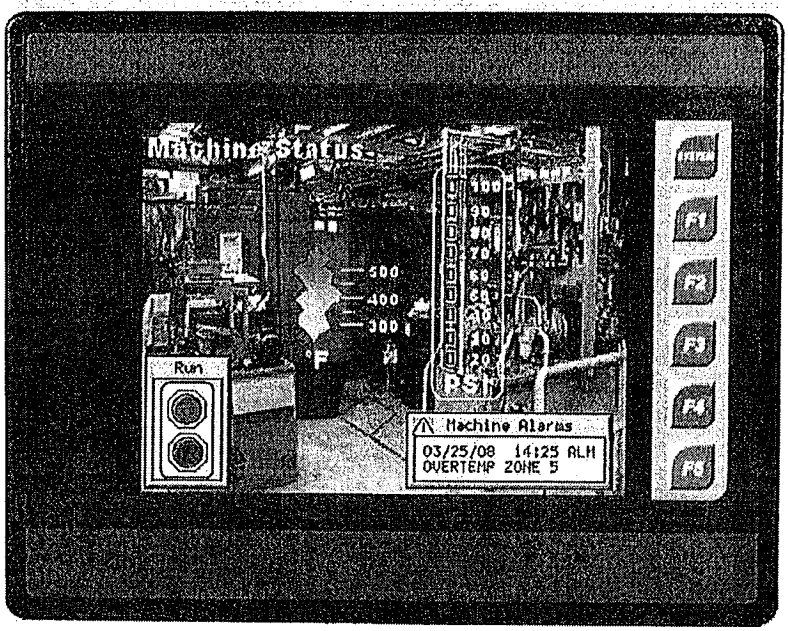

The XL6 offers fast graphics updates and a logic scan rate of 0.2mS/K, resulting in superior overall performance for larger applications.

Just like the XLe and XLt, the XL6 comes with color-coded input and output connectors for fast, easy wiring in the field. Plus, the XL6 also incorporates a newly designed battery compartment on the back that allows you to quickly change-out the memory back-up battery. Two battery connectors are included so you can install a new battery first, then remove the old one.

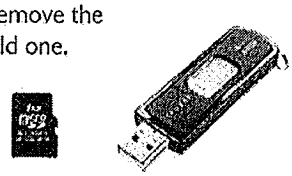

The XL6 features both MicroSD™ and USB (A) connectors for data. MicroSD™ supports up to 2GB of local storage, while the USB port will soon support portable file transfer to/from the XL6.

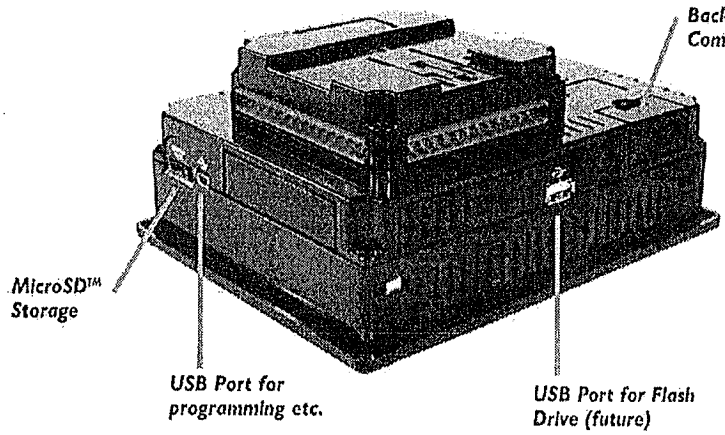

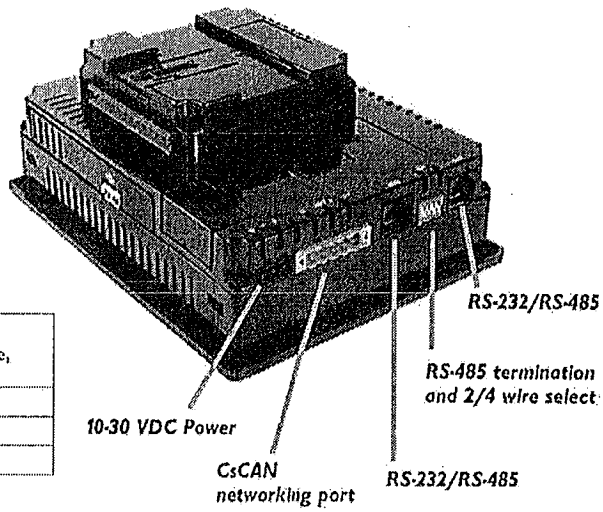

XL Series at a glance...

	Built-in I/O; Expandable	MicroSD™ Memory Datalog	Displays Graphics	Outdoor Readable	USB	Ethernet, Radio, Phone, Cell Options
XLe	yes	yes	2.25" LCD	no	no	yes
XLt	yes	yes	3.5" touch	best	no	yes
XL6	yes	yes	5.7" touch	good	yes	yes

Applications

As a compact, powerful controller, the XL Series can be used in literally thousands of applications. From OEM machine control to machine monitoring in a plant environment, the XL Series can be instrumental in keeping you or your customer's automation activities running smoothly. Future expansion is not a concern because the XL Series is part of the wide ranging OCS product line — programmable throughout with a single FREE software package, Cscape™.

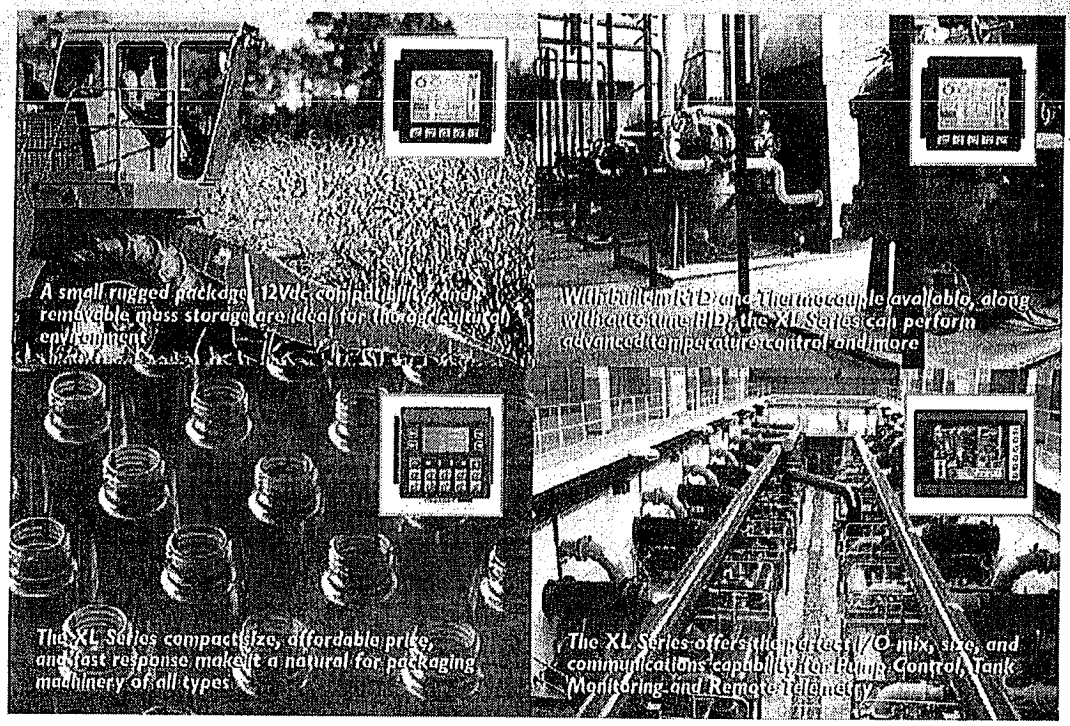

Customization

OCS is designed to look like a "generic" operator station, fitting in with most cabinet and console designs and color schemes. But sometimes adding an individualized look can mean a world of difference in the overall usefulness of an operator station and the marketing of your machine or system.

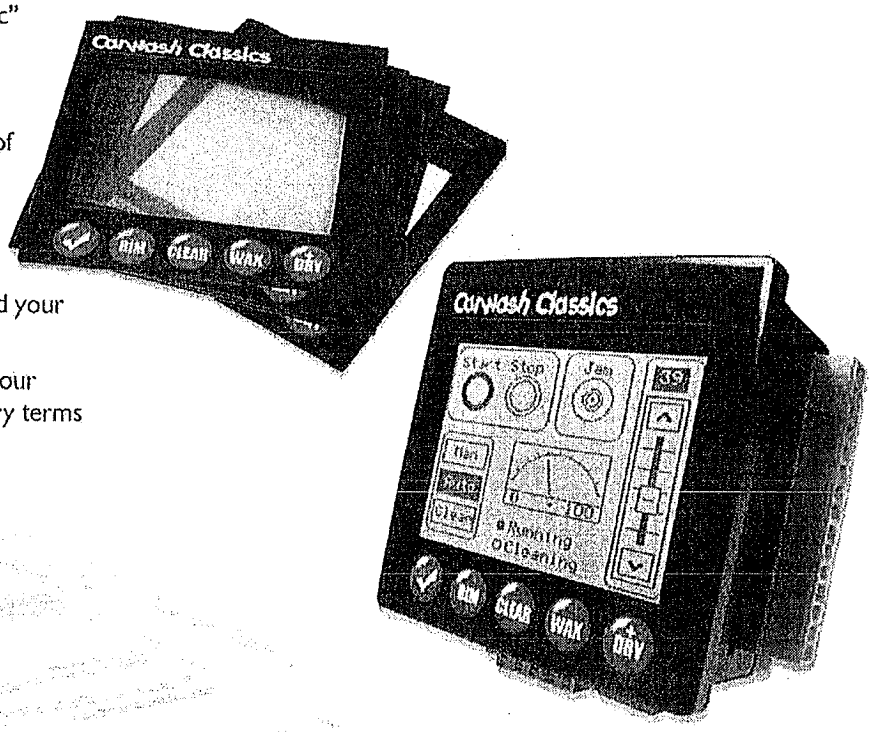

- Apply a label on the overlay to add your company logo
- Substitute a custom keypad with your company's logo, colors and industry terms
- Design overlays in any language

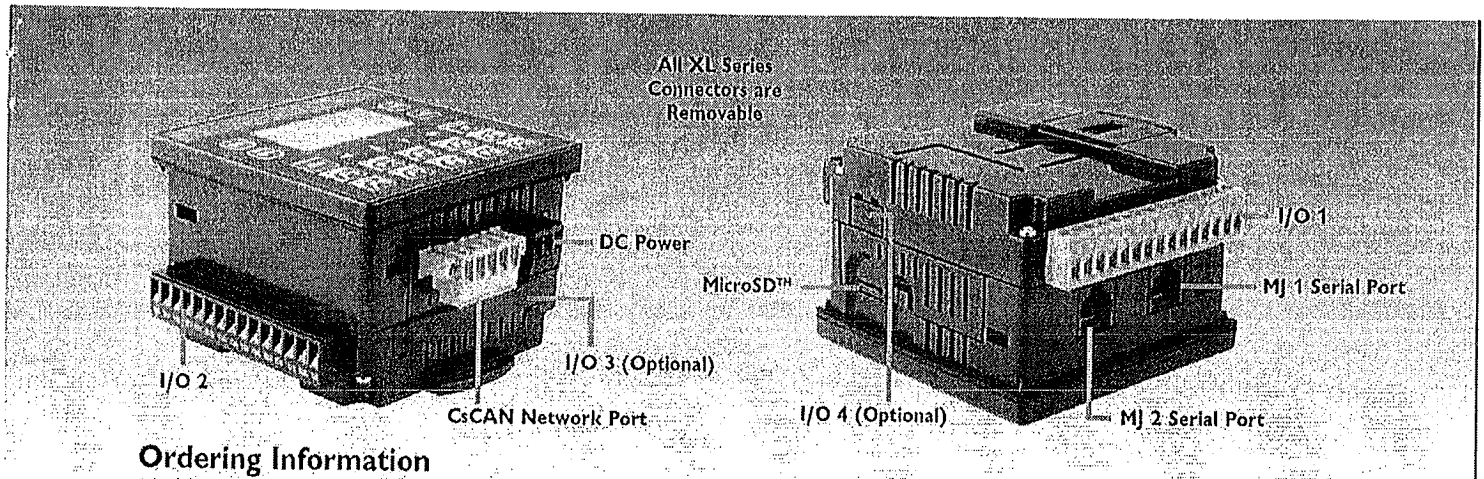

Ordering Information

OCS Controllers XLe	XLt	XL6	I/O Options Digital In	Digital Out	Analog In	Analog Out
HE-XE102	HE-XT102	HE-XL102	12 DC (4 HSC)	6 Relay	4	
HE-XE103	HE-XT103	HE-XL103	12 DC (4 HSC)	12 DC (2 PWM)	2	
HE-XE104	HE-XT104	HE-XL104	24 DC (4 HSC)	16 DC (2 PWM)	2	
HE-XE105	HE-XT105	HE-XL105	12 DC (4 HSC)	12 DC (2 PWM)	2 Universal (T/C, RTD, mV, mA, V)	2
HE-XE100	HE-XT100	HE-XL100	Same features and functions as other models but no built-in I/O			

Communications Options			
HE-XEC	10/100 Ethernet	HE-200GPS183GSM	GPS Satellite Receiver
HE-XRC9	900 MHz Wireless Modem	HE-GSM04ANT	Cell Modem with T-bar Antenna (3M)
HE-XMC	Telephone Modem		

Specifications

Display	XLe	XLt	XL6
Graphics/Text	Yes/Yes	Yes/Yes	Yes/Yes
Pixels	128 X 64	160 X 128	320 X 240
Display Technology	2.25" Backlit LCD	3.5" Daylight Readable Touch	5.7" TFT 32,000 Colors
Character Height	Adjustable	Adjustable	Adjustable
Keypad Touch Screen			
Total Keys	20	5	6
Function Keys	10	4	5
Numeric Keys	Shared	Pop-up Keypad	Pop-up Keypad
OEM Faceplate Available	Yes	Yes	Yes

Controller		
Ladder Logic Memory	256KB	
Logic Scan Rate	1.2 mS/K	0.2 mS/K
Memory Card Slot	Yes (up to 2GB)	
Local Comment Storage	Yes	
Floating Point Support	Yes	
AutoTune PID Capable	Yes	
I/O Support		
Built-In I/O	Yes	
SmartStack I/O	Yes via CsCAN	
SmartStix I/O	Yes via CsCAN	
SmartMod I/O	Yes via Modbus Serial	
FOX Expansion I/O	No	
Serial Communications		
Total Active Ports	2	2 plus USB
RS-232 Ports / RS-485 Ports	Yes/Yes	
PLC/Drive Protocols	Yes	
RTU/Modbus Master/Slave	Yes	
Serial ASCII In/Out	Yes	
USB Communications Port	No	Yes

Networking	XLe	XLt	XL6
Integrated CsCAN Network		Yes	
Maximum CsCAN Distance		6000 feet/2 km	
Programming Over Network		Yes	
Peer-to-Peer Messaging		Yes	
DeviceNet/PROFIBUS Master		No	
Ethernet/Internet/Wireless			
Ethernet Support		Optional	
Telephone Modem Support		Optional	
Wireless Modem Support		Optional	
Cell Modem Support		Optional	
General Specifications			
Height (in/mm)	3.7" (95.1)		5.65" (143.6)
Width (in/mm)	3.7" (95.1)		7.33" (186.1)
Depth (in/mm)	2.5" (63.9)		3.46" (88)
Weight (oz/kg)	12.5 (.354)		26.5 (.751)
Environmental	-0 to 50 C	-10 to 60	-10 to 60
Washdown Applications	Yes	Yes	Yes

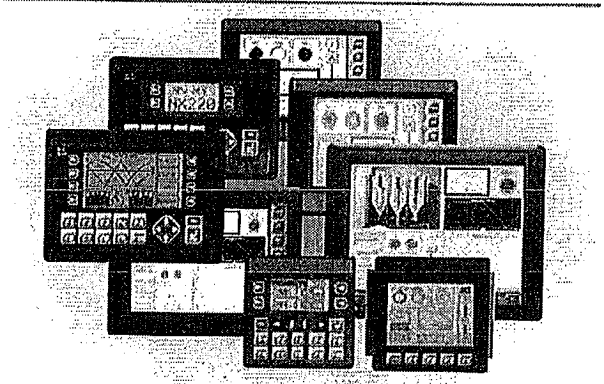

Horner is dedicated to saving you both time and money by providing the industry's widest range of all-in-one controllers

Horner APG
USA 877-665-5666 or 317-916-4274
Europe (+353) 21-4321266
www.hornerOCS.com

Cscape, SmartStack, SmartStix, and CsCAN are registered trademarks of Horner APG, LLC. MicroSD is a trademark of SanDisk Corporation.
©2008 Horner APG, LLC. XL-BRO 04/30/08