ALUMA-ZORB™/ARENA-ZORB LOW EMISSIVITY CEILING
SPECIFICATIONS

1.01 **Scope of Work**

.01 Contractor shall furnish and install a complete overhead suspended Low Emissivity Ceiling in the Mullins Practice Rink. The ceiling shall cover an area of 20,500 square feet consisting of 100 feet in width and 205 feet in length. The system shall be Aluma Zorb/Arena Zorb as manufactured and distributed by Arena Resources Inc. Hamilton, Ontario, Canada 1-800-667-2579

.02 Contractor shall also include in his bid a list of a minimum of twenty-five (25) previous Aluma Zorb/Arena-Zorb installations, which have been installed by the Contractor. Included in this list must be the facility address, phone number and contact name.

1.02 **Materials**

.01 Aluma Zorb/Arena-Zorb laminate is composed of 0.0003 inches (7.6 micron) of aluminum foil laminated with a special flame resistant adhesive to a 0.0015 inches (38.1 micron) of UV stabilized white polypropylene. A 4 x 4 fiberglass scrim is interposed for added strength. Emissivity of the aluminum facing shall not exceed 0.03.

The system specified is based solely upon the characteristics and standards listed herein. The listed criteria have been established as the minimum acceptable values for any low emissivity ceiling system to be offered on this project. As all aspects and equipment within the ice rink have been designed to utilize the low emissivity ceiling principle, products not meeting the minimum requirements listed will not be accepted as they could adversely affect the performance of the rink.

Additionally, only those materials meeting or exceeding the following ASTM values and ULC/UL surface burning characteristics shall be acceptable.

Physical Properties:

Weight	15 lbs./1,000 sq. ft.	93 grams/m2
Tensile Strength	40 lbs./inch width (MD)	7.0 kn./m (MD)
	40 lbs./inch width (XD)	7.0 kn./m (XD)
Panel Width	54 inches (standard)	137.2 cm
Colour (exposed face to ice)	Silver	Aluminum

Surface Burning Characteristics: (CAN ULC-S102MA & UL-723)

	Foil Exposed	Film Exposed
Flame Spread	5	5
Smoke Developed	5	0

.02 **Clamping**. Each individual ceiling section shall be terminated at each end by using a 3/16" OD (4.76 mm) Aircraft cable and Arena Resources' Rigid Vinyl Extrusion Clip (Detail #6).

.03 **Suspension System**. Individual ceiling sections shall be supported by a suspension system, consisting of lightweight galvanized aircraft cables 3/32" (2.38mm) diameter plastic-coated 3/16" (4.76mm) OD, 7 x 7 construction on approximately 6' centers. Cables shall have a minimum breaking strength of 920lbs (4100N).

Cables shall be secured at each end to the elements of the building structure. Each cable shall be installed complete with one (1) turnbuckle, in order to allow adequate tensioning. All cable connections shall be secured with a minimum of two (2) clamps, 30'-0" (9.1m) c/c to reduce sag

If the Aluma Zorb/Arena-Zorb laminate is terminated at a suspension cable, the cable shall be installed to reduce side deflections to a maximum of 4" (10cm). Use standard 3/32" (2.38mm) PVC-coated cable, as above, with appropriate tiebacks to building elements or by using 3/16" (4.76mm) OD 7 x 19 plain galvanized aircraft cable, properly tensioned. Tieback may not be required using this heavier cable.

.04 **Netting System.** **(Optional)** For ceiling heights less than 30 feet (9m), Arena Resources Inc. netting system can be installed to prolong the low emissivity ceiling and maintain appearance. Netting system shall consist of a white treated nylon knotted mesh, with 1.25 x 1.25 openings. Netting system shall cover a minimum of two (2) bays (approximately 50 feet or 15 metres) at each end of the ice surface. (Netting Optional).

1.03 **Installation**

.01 Laminate panels shall be overlapped minimum of 6" (15cm).

.02 Panels shall be tensioned so that overlapping edges are even and without appreciable gaps or sags.

.03 Slits shall be cut in the panels to accommodate obstructions such as lights, fans, sprinklers etc.

.04 All edge cuts shall be supported by the adjacent panel and shall be taped with aluminum tape, suitable for the service conditions.

1.04 **Energy Analysis**

.01 If requested, a detailed energy analysis of the tendered facility should also accompany the bid.

1.05 **Detailed Drawings**

.01 Successful contractor to provide detailed drawings showing clamping system, suspension system, intermediary supports, end connections and material installation techniques upon request.

1.06 **Warranty**

.01 Entire ceiling system shall be warranted against defects in material for a period of ten (10) years and workmanship for period of one (1) year from the date of completion of the installation.

1.07 **Manuals**

.01 Upon completion of low emissivity ceiling, Contractor to provide one (1) operating manual and instruct rink personnel on the proper operation, refrigeration system adjustments and maintenance associated with the new ceiling.

DAVIS
Mechanical Service, Inc.

Aluma Zorb

POLYPROPYLENE / SCRIM / FOIL
Meets ASTM C1136, Type I

FACING COMPOSITION	DESCRIPTION	VALUES (ENGLISH)	VALUES (METRIC)
White Film	Polypropylene	0.0015 inch	38.1 micron
Adhesive	Flame Resistant		
Reinforcing	Bi-directional Fiberglass	4 / inch (MD) 4 / inch (XD)	16 / 100 mm (MD) 16 / 100 mm (XD)
Foil	Aluminum	0.0003 inch	7.6 micron

PHYSICAL PROPERTIES	TEST METHOD	VALUES (ENGLISH)	VALUES (METRIC)
Basis Weight	Scale	17 lbs / 1000 ft²	83 g / m²
Permeance (WVTR)	ASTM E96 Procedure A	0.02 perm (grains/hr·ft²·in Hg)	1.15 ng / N·s
Bursting Strength	ASTM D774	90 psi	6.3 kg / cm²
Puncture Resistance	ASTM C1136	130 beach units	3.9 Joules
Tensile Strength	ASTM C1136	45 lbs/inch width (MD) 45 lbs/inch width (XD)	7.9 kN / m (MD) 7.9 kN / m (XD)
Caliper / Thickness	Micrometer	0.008 inch	203 micron
Accelerated Aging	30 Days @ 95% RH, 120°F (49°C)	No Corrosion No Delamination	No Corrosion No Delamination
Low Temperature Resistance	ASTM D1790 -40°F (-40°C)	Remains Flexible No Delamination	Remains Flexible No Delamination
High Temperature Resistance	4 hours @ 240°F (116°C)	Remains Flexible No Delamination	Remains Flexible No Delamination
Water Immersion	24 hours @ 73°F (23°C)	No Delamination	No Delamination
Mold Resistance	ASTM C665 / C1338	No Growth	No Growth
Dimensional Stability	ASTM D1204	0.25%	0.25%
Emissivity (Foil)	ASTM E408	0.03	0.03
Light Reflectance (Film)	ASTM C523	85%	85%

FIRE TESTING

	UL-723 / ASTM E84		CAN ULC-S102M	
	Flame Spread	Smoke Developed	Flame Spread	Smoke Developed
Film Exposed	10	20	10	20
Foil Exposed	5	10	5	10

Physical Properties based upon statistical averages, Weight / Thickness +/- 10%

6689 Old Collamer Road • East Syracuse • NY 13057 • 315-463-9999 • Fax 315-438-8643

DAVIS MECHANICAL SERVICE, INC.

ALUMA-ZORB INSTALLATION DETAILS

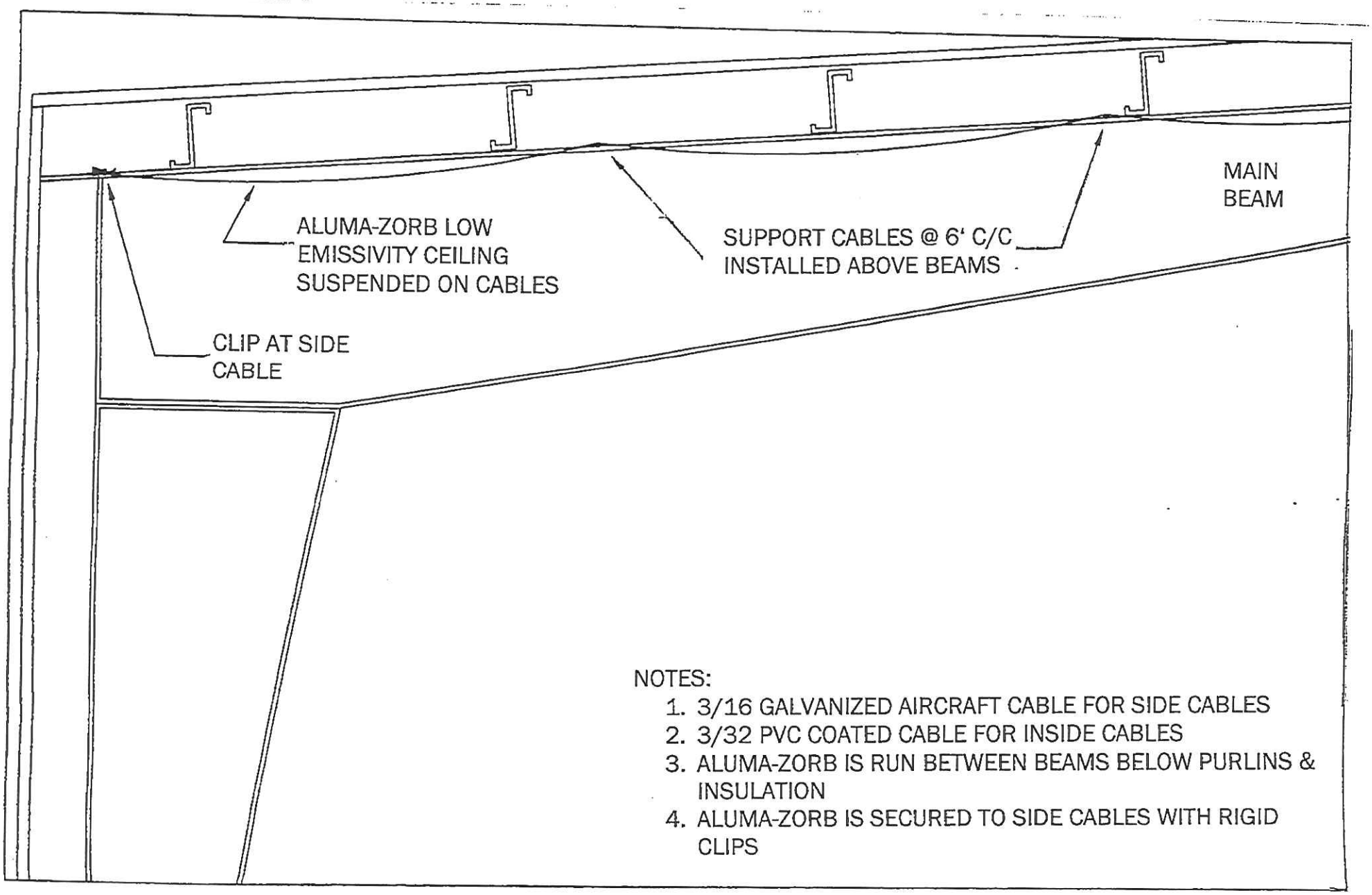

NOTES:

1. 3/16 GALVANIZED AIRCRAFT CABLE FOR SIDE CABLES
2. 3/32 PVC COATED CABLE FOR INSIDE CABLES
3. ALUMA-ZORB IS RUN BETWEEN BEAMS BELOW PURLINS & INSULATION
4. ALUMA-ZORB IS SECURED TO SIDE CABLES WITH RIGID CLIPS

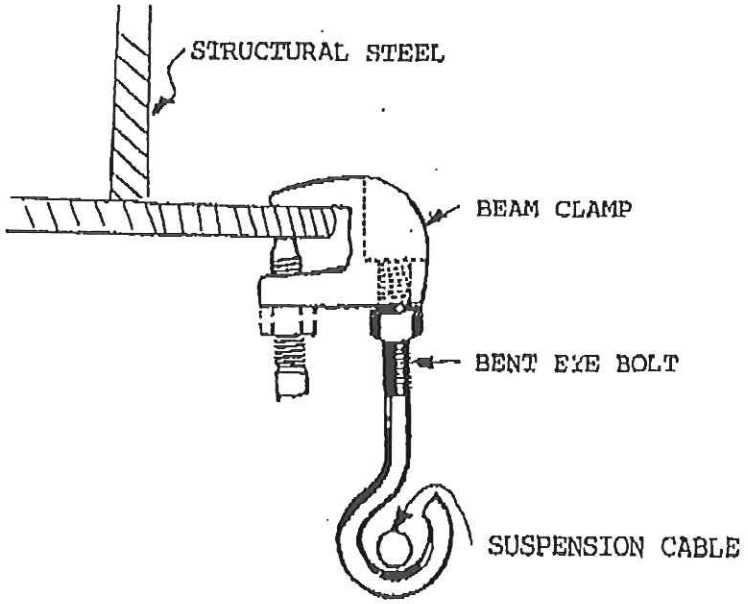

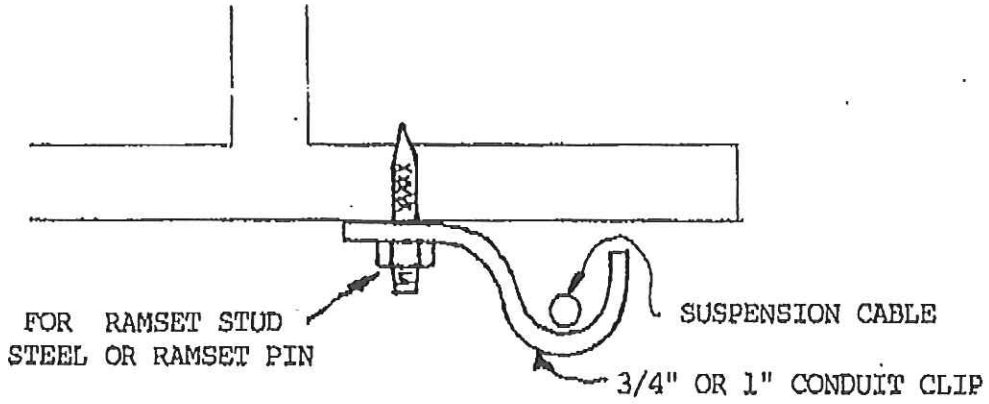

FOR WOOD #10 x 1½" WOOD SCREW

FOR CONCRETE ¼" OR 1½" TAPCON SCREW

DAVIS MECHANICAL SERVICE, INC.

SUSPENSION CABLES
INTERMEDIATE SUPPORTS

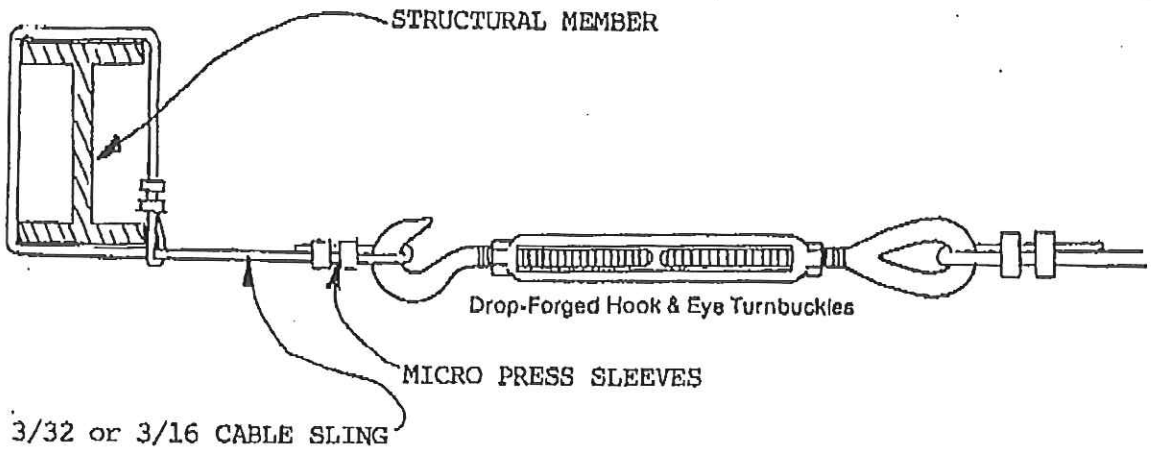

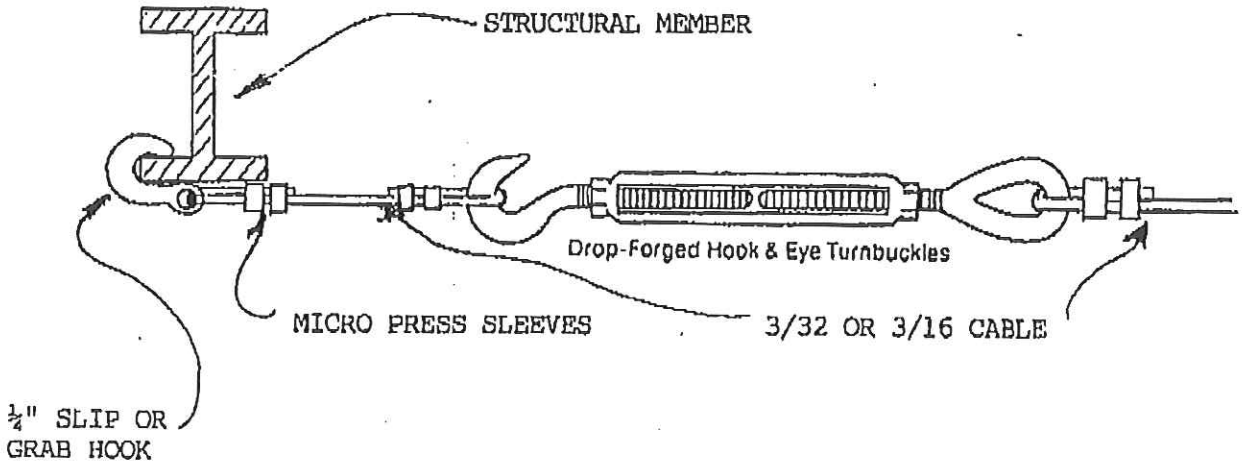

DAVIS MECHANICAL SERVICE, INC.

CABLE END TERMINATIONS DETAILS

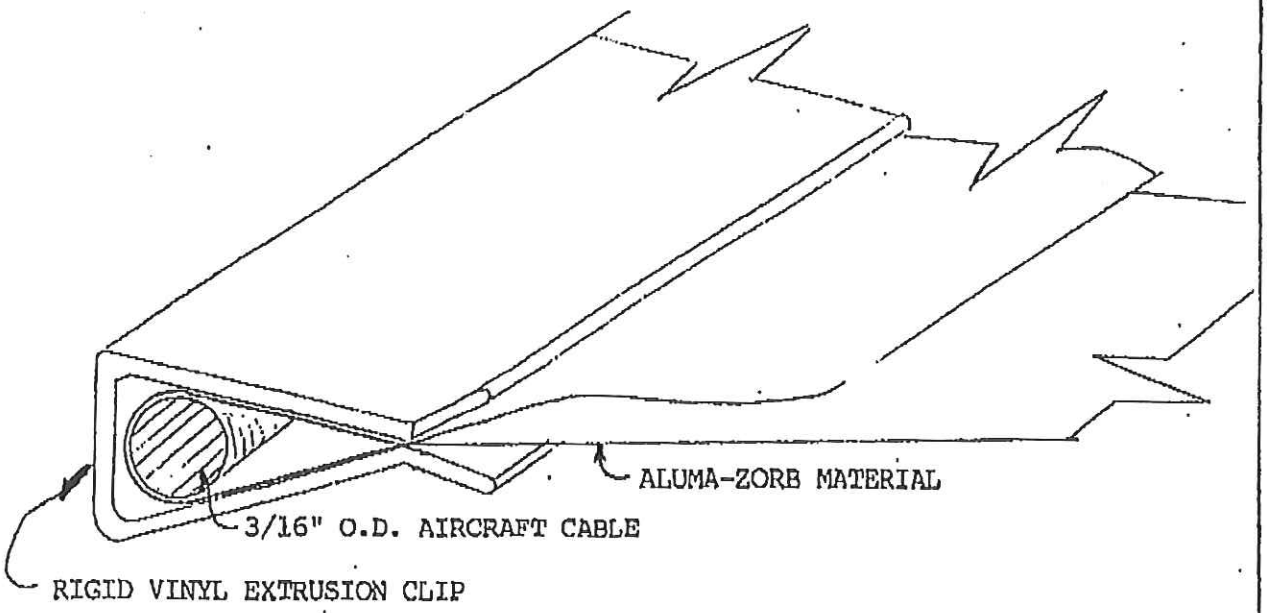

NOTE!

1. RIGID VINYL EXTRUSION CLIP AVAILABLE IN 4'-0 LENGTHS CAN BE CUT TO SUIT INSTALLATION REQUIREMENTS

2. INSTALL ALUMA-ZORB FABRIC AROUND CABLE AND SLIP CLIP OVER THE CABLE. LEAVE MINIMUM 6" EXCESS MATERIAL LAYING ON TOP OF CEILING PANEL TO ALLOW FOR ADJUSTMENT

3. FOR CONTINUOUS END TERMINATION OF FABRIC USE 3/16" - 7x19 GALVANIZED AIRCRAFT CABLE (PLAIN) RO MINIMIZE SIDE DEFLECTION MID-SPAN TIE BACKS MAY NOT BE REQUIRED PROVIDED TENSION IS ADEQUATE

4. FOR TERMINATION AT OBSTRUCTIONS FASTEN DIRECTLY TO ALUMA-ZORB 3/32" PVC COATED SUSPENSION CABLE

DAVIS Mechanical Service, Inc.

DAVIS MECHANICAL SERVICE, INC.

TERMINATION OF ALUMA-ZORB FABRIC
RIGID VINYL EXTRUSION CLIP

DAVIS
Mechanical Service, Inc.

ALUMA-ZORB LOW EMISSIVITY CEILING CURTAIN SYSTEM OPERATING MANUAL

6689 Old Collamer Road • East Syracuse • NY 13057
Tel. 315-463-9999 • Fax 315-438-8643
1-800-734-3284

ALUMA-ZORB LOW EMISSIVITY CEILINGS

This technical manual is designed to provide rink personnel with information and recommendations that will ensure that maximum benefits are derived from the low emissivity ceiling.

Although the **Aluma-Zorb** ceiling is a passive system (i.e. no moving parts), there are still several operational changes that must be made by staff in order to capitalize on the energy savings and maintain building integrity.

It is recommended that this manual be read by all staff and left posted in the refrigeration room. If, after reading the manual there are any questions, the operator should contact the following office for explanations and further details:

Davis Mechanical Service, Inc.
6689 Old Collamer Road
East Syracuse, NY 13057

Tel: 315-463-9999
Fax: 315-438-8643

This manual discusses several areas where the **Aluma-Zorb** low emissivity ceiling will have an effect on the present operation of your ice rink. If a problem does arise, please refer to that specific section in this manual. Taking a few minutes to read or re-familiarize yourself with the information contained herein will go a long way in solving your problem or in understanding what has taken place. Failure to make the appropriate operational changes, will result in reduced energy savings, possible increased condensation/moisture problems and possible voiding of warranties. Our experience has shown problems usually occur at system start up, because the operator has failed to make the appropriate changes, especially in brine/refrigerant temperature setpoints!

REFRIGERATION

The most important operational change that will need to be made with a low emissivity ceiling is increasing the brine/refrigerant temperature. This operational change cannot be overemphasized, especially at system start up.

Brine (i.e. indirect system) or refrigerant (i.e. direct system) temperatures must be increased 2°F to 4°F (1°C to 2°C), in order to bring the ice temperature back to its original setting (i.e. 22°F to 24°F or -5.5°C to -4.4°C).

Once installed, a low emissivity ceiling will cause the ice temperature to drop 2°F (1°C) to 4°F (2°C) as a result of the reduced heat load (i.e. radiant) on the ice surface.
For example, if you presently operate with 18°F (-7.8°C) to 20°F (-6.7°C) brine, your ice surface temperature will be about 24°F or -4.4°C (under steady state conditions). With a low emissivity ceiling, maintaining the same brine temperatures (18°F, 20°F or -7.8°C, -6.7°C) will produce an ice temperature of about 22°F (-5.5°C). Failing to adjust the brine temperatures (i.e. increase by 2°F or 1°C) or setting the **Smart Drive** to 24°F to 26°F (-4°C to -3°C), could produce condensation and moisture problems, uncomfortable ambient conditions, increased equipment (compressors, underfloor heaters, etc.) run time, increased convective and conductive loads, and reduced energy savings.

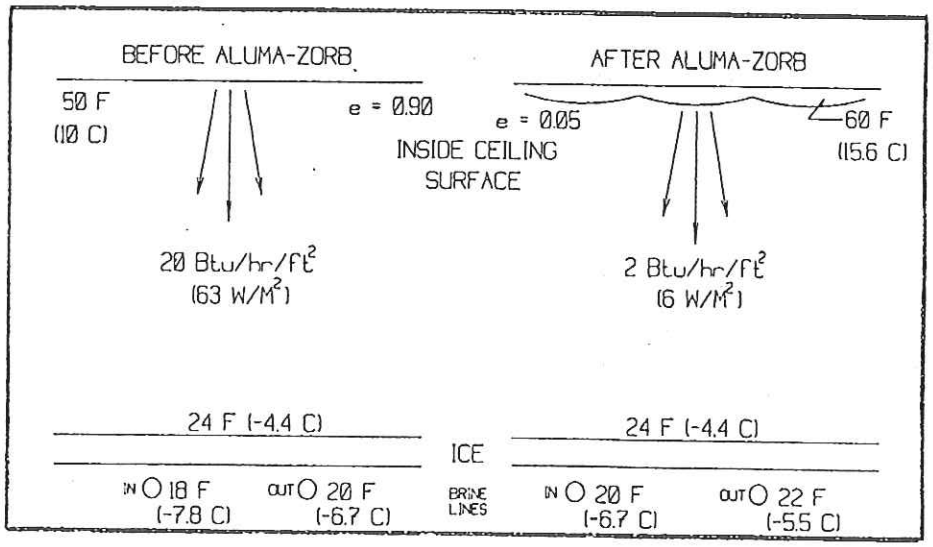

It is recommended that the operators raise the brine/refrigerant temperatures 1°F (0.5°C) per day until the desired ice temperature and quality is reached. The ice temperature can be checked with a digital or alcohol thermometer and in most cases should be around 24°F to 26°F (-4°C to
-3°C). The ice temperature should be checked at a time when no major heat loads or activities have occurred. First thing in the morning, before a flood, is usually a good time to take these readings.

CONDENSATION AND FOG

A low emssivity ceiling will help to prevent ceiling condensation and dripping by keeping the air above the ceiling warmer and dryer than it was before (i.e. above the dew point). The heat that is no longer radiated to the ice stays above the **Aluma-Zorb,** keeping the ceiling temperature 10-20 degrees warmer, between 60-80°F (16-26°C). Conversely, without a low emissivity ceiling in place, the ceiling temperature would be around 50°F (10°C), which is typically below the air dew point. When a surface is below the dew point temperature, condensation and dripping will occur on that surface (ceiling, boards, glass, speakers, etc.).

However, in some cases, the rink operator will notice that condensation, dripping and fog has actually increased with a low emissivity ceiling in place. This can be the result of several factors, all of which can be easily explained and corrected.

The first thing to check is that the brine/refrigerant temperatures were increased to bring the ice temperature back to its original setting. If this procedure was done, try increasing the brine/refrigerant temperatures a couple more degrees (i.e. 2°F or 1°C), while keeping in mind ice quality. Lower ice temperatures reduce ambient air temperature and dew point, thus increasing the risk of condensation and drip.

Once the brine temperatures are corrected and the condensation problem still exists, then the low emissivity ceiling could simply be drying out the old insulated or wood ceiling. Since the air space above the **Aluma-Zorb** is warmer and drier, the moisture that has penetrated the old wooden or insulated ceiling will migrate to this warmer and drier area. When the air space can hold no more water (i.e. 100% Rh), the moisture will condense on the **Aluma-Zorb** panels or in the rink environment.

This is a temporary situation that can be corrected by keeping the water off the panels, by running the exhaust fans, and by increasing dehumidification. The water formed on the panels can be removed by fabricating a paint roller on a long stick and gently guiding the pocket of water towards a panel seam. Keeping the **Aluma-Zorb** panels free of water will help to speed up the drying process.

The ventilation fans and dehumidifiers will definitely prove useful in getting rid of much of the moisture remaining in the building, and should be kept on as much as possible. When all else fails, keeping the lights or the spectator heaters on will help further warm surfaces above dew point temperature to prevent condensation and promote drying.

And lastly, check the structural roof for leaks. On many occasions, the moisture formed on the **Aluma-Zorb** ceiling can be traced to roof leaks, which should be immediately corrected.

Actual roof core samples were taken in rinks before and after a low emissivity ceiling was installed. In all cases, the wood or insulation is drier than it was before. A drier ceiling will have higher R-values and a greatly prolonged life through reduced corrosion and rot.

LIGHTING

The highly reflective surface of the **Aluma-Zorb** ceiling will increase present illumination levels by 20% to 50%. Light will bounce back and forth between the painted ice and the **Aluma-Zorb** ceiling in a reflective action, which mi@ses glare and shadows and improves the overall appearance of the rink.

The illumination levels recommended for ice rinks by the Illuminating Engineering Society (I.E.S.) are:

Activity	Footcandles	Lux
Pro Hockey (televised)	100	1000
Semi-Pro Hockey (Jr. A-C)	50	500
Recreational Hockey	30	300
Public Skating	20	200
Figure Skating	15	150
Ice Maintenance	15	150

Check your lighting levels with a light meter to see if your new lighting levels are generally in the 30-50 footcandles (300-500 lux) range. If you find your lighting levels are acceptable, then you may want to take advantage of your present banking or dimming system to maximize your energy savings.

For example, if you presently have a dimming system, then the system may need to be fine-tuned to take advantage of the increased illumination levels. However for many dimming systems, this will occur naturally, as the photocell will pick up the increase and automatically dim the system to the desired setpoint. Check with your lighting manufacturer for details on how your system will respond to increased reflectances.

In many ice rinks, the lighting system is banked in such a way that one-half or one-third of the lights can be separately turned on. Ice rinks can take advantage of this control and improved lighting levels be turning on only those lights needed to safely meet the activity requirements.

These procedures and suggestions will take some experimentation and feedback from the various user groups and rink operators. However, by properly controlling the lighting to correspond with the ice activity, additional electrical and refrigeration (i.e. lighting heat loads) energy will be saved.

ENERGY CONSERVATION

One of the prime benefits of an **Aluma-Zorb** low emissivity ceiling is the reduction in electrical consumption and costs. By practically eliminating the radiant heat load on the ice, refrigeration equipment (compressors, evaporative condenser fan/pump) run-times will be drastically reduced. In addition, improved compressor efficiency (i.e. C.O.P.), increased suction temperatures and reduced lighting consumption, will further reduce electrical costs.

Typically, the low emissivity ceiling will reduce present radiant heat loads from about 20 BtU/ft2 hr (63 w/m^2) to 2 Btu/ft^2hr ($6w/m^2$). This can easily be verified by on-site testing with an infrared radiometer.

In order to verify your energy savings or if your energy savings seem less than expected, the following checklist and examples will prove useful:

A. Check Brine Temperatures

Once again, this point cannot be over-emphasized. Raise your brine/refrigerant temperatures to bring the ice temperature back to its original setpoint or set your **Smart Drive** to 24°F to 26°F. Based on studies conducted by the U.S. Department of Energy (DOT/TIC-10289), an increase in ice temperature of 1°F (0.5°C) will reduce refrigeration usage by about 6%. If the ice quality is not affected, the brine/refrigerant temperatures should be raised as high as possible.

B. Check Run-Time on Compressors

Many rinks have run-hour meters on their compressors for maintenance purposes. Comparing monthly run-hours before and after the **Aluma-Zorb** ceiling can provide a fairly accurate account on the effect the low emissivity ceiling on the refrigeration equipment. For example:

Month	**Run-Time (Before)**	**Run-Time (After)**	**Percent Savings**
January	372 hours	297 hours	20%
June	76 hours	403 hours	30%
October	446 hours	335 hours	25%

C. Check Electrical Consumption (kWh)

Compare the monthly electrical consumption figures in kilowatt-hours (kWh) before and after the **Aluma-Zorb** ceiling was installed, not just the dollar values. Remember, energy rates (cents/kWh) increase each year and even if your consumption remained the same, the dollar amount would be increased simply by the rate increase (i.e. 6%).

The actual electrical savings can be estimated by referring to the following example:

Month	Consumption (B)*	Rate (B)	Consumption (A)*	Rate (A)
January	80,000 kWh	5.0 cents/kWh	60,000 kWh	5.3 cents/kWh

Energy Savings for January = 80,000 kWh – 60,000 kWh = **20,000 kWh**
Financial Savings for January = 20,000 kWh x $.053/kWh = **$1,060.00**
* where B = Before Aluma-Zorb installation and A = After Aluma-Zorb installation

D. Check Electrical Demand (kW)

Compare the monthly kilowatt demand figures before and after the **Aluma-Zorb** ceiling was installed. The low emissivity ceiling will either slightly reduced the demand or have no effect on the demand figures. In no way will just the **Aluma-Zorb** ceiling increase demand, unless of course the operational changes have not been made.

If the electrical demand (kW) is higher after the **Aluma-Zorb** installation, the rink has likely added new electrical equipment (lights, heaters, dehumidifiers, etc.) or has had this equipment repaired. This will have an effect on demand, electrical consumption and the total energy bill. For example:

Month	kW (Before)	kWh (Before)	kW (After)	kWh (After)
July	200	120,000	225	115,388

Upon investigation, it was found the rink had consequently repaired the underfloor electric heater (25 kW) and adjusted the setpoint to 50°F (10°C), causing the heater to run continuously.

The actual energy savings can be estimated as follows (assuming COP = 2.74):

Electrical = 25 kW x 744 hrs/month	= 18,600 kWh
Refrigeration = (25 kW x 744 hrs/month)/2.74	= 6,788 kWh
Increased electrical consumption from underfloor heater	= 25,388 kWh

Actual Energy Savings = 120,000 kWh - (115,388 - 25,388) kWh
= 30,000 kWh at $.053/kWh
= $ 1,590.00

E. Check Operational Changes

It is important to compare the operation of the ice rink before and after the **Aluma-Zorb** ceiling.

Increased ice rental usage, a longer ice season, new equipment, building additions and even new operators can have an affect on the monthly electrical consumption and demand.

F. Check Weather Changes (degree days, insulation, wind)

The change in climate and weather from year-to-year will have an affect on the electrical consumption and demand for an ice rink.

Colder weather will tend to cause electrical heaters to run more frequently. Warmer weather tends to increase all forms of heat gain (conductive radiant, convective) in an ice rink, requiring a greater amount of refrigeration.

Although weather and climate effects are somewhat difficult to quantify, generally they can have a major effect on energy consumption from year to year.

The **Aluma-Zorb** low emissivity ceiling has proven itself in hundreds of ice rinks world-wide to reduce the radiant heat load and refrigeration requirements for ice rinks. Independent studies and sound engineering principles presented by such authorities as ASHRAE, US Department of Energy, Ontario Ministry of Energy and various engineering handbooks can testify to the authenticity of the product and the principles on which it is based.

There is no practical reason why the **Aluma-Zorb** low emssivity ceiling should not reduce your present refrigeration requirements and electrical consumption. Look closely at your operation and equipment, since most problems can be traced back to operating procedures or changes. If after following the Energy Conservation checklist you still find that your rink is not achieving the expected savings, please feel free to give us a call. Our staff will be happy to help you.

NOTES