Appendix J – UE Select Area Evaluation

1/11A

117+00

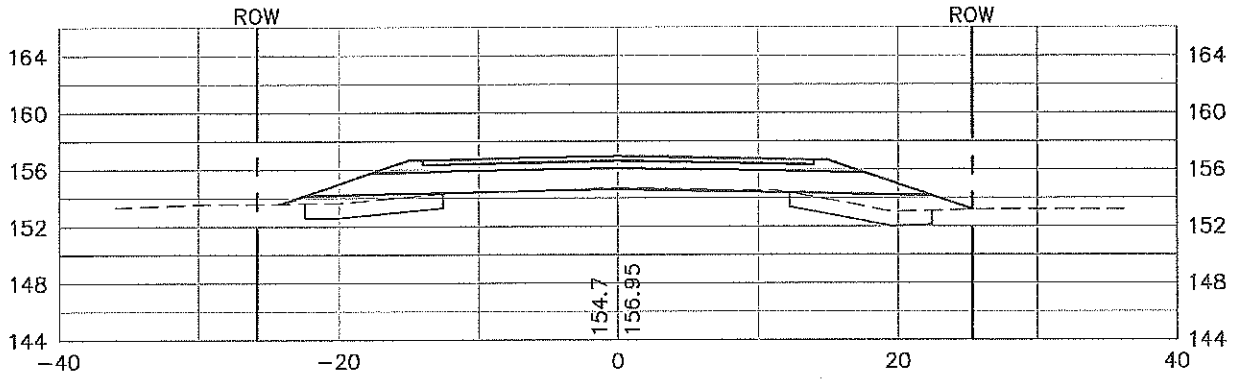

Left	Right
Section Overview	
Design section is raised 2.25'over existing grade. 24" of gravel is specified. Phase IIA pavement installed 6/9/13.	
Paved Road Width (Design = 28') and Crown (Design = 2%)	
Slope = 0.8% to 0.9% Paved Width = 24.5' (measured)	Slope = 1.3% to 1.6%
Variations (NHDOT Section 3.17.3.4.1)	
0 0 0 3/8" 3/4"	0 0 0 1/4" 0
Cracking	
None observed	
Cores, Gravels, and Subgrade	
Pavement: 3.0" to 4.0" depth (B-3, B-30, B1core). Pavement may be thicker in WB lane. Gravel: 20" to 26" (B-3, B-30)	
Groundwater	
Not measured *	
Other Comments	
Pavement appears to be in good condition. * Piezometers were only installed at Sta 128+35 RT, Sta 159+80 RT, and Sta 191+23 RT.	

1/11A

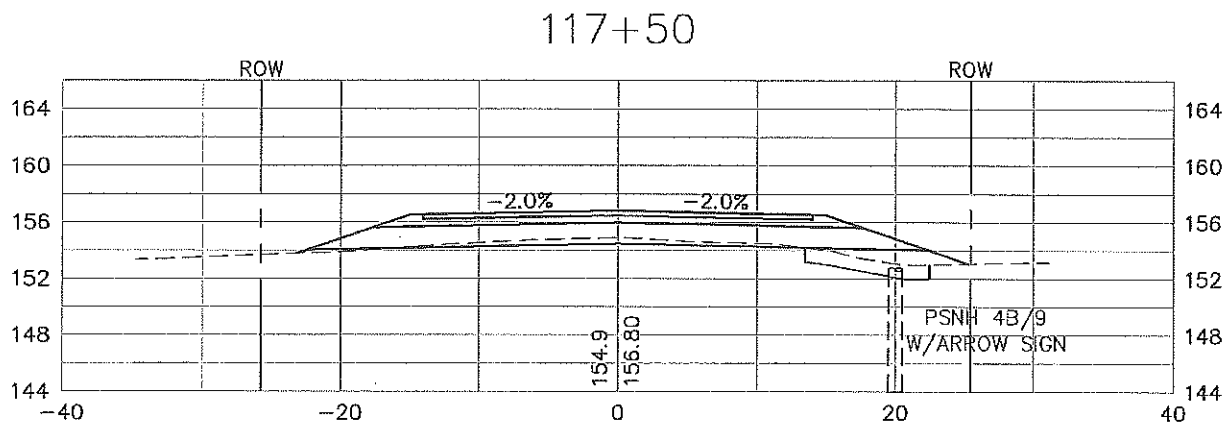

Left	Right
Section Overview	
Design section is raised 1.9′ over existing grade. 24″ of gravel is specified. Phase IIA pavement installed 6/19/13.	
Paved Road Width (Design = 28′) and Crown (Design = 2%)	
Slope = 0.5% to 0.7% Paved Width = 24.5′ (measured)	Slope = 1.8% to 2.2%
Variations (NHDOT Section 3.17.3.4.1)	
0 0 0 3/8″ 3/4″	0 0 0 3/16″ 0
Cracking	
None observed	
Cores, Gravels, and Subgrade	
Pavement: 3.0″ to 4.0″ depth (B-3, B-30, B1core). Pavement may be thicker in WB lane. Gravel: 20″ to 26″ (B-3, B-30)	
Groundwater	
Not measured *	
Other Comments	
Pavement appears to be in good condition. * Piezometers were only installed at Sta 128+35 RT, Sta 159+80 RT, and Sta 191+23 RT.	

1/11A

118+00

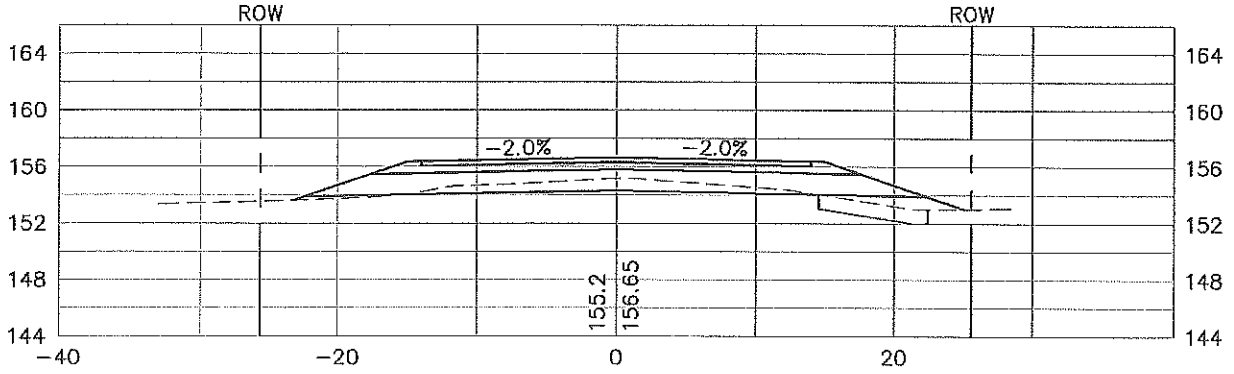

Left	Right
Section Overview	
Design section is raised 1.45' over existing grade. 24" of gravel is specified. Phase IIA pavement installed 6/19/13.	
Paved Road Width (Design = 28') and Crown (Design = 2%)	
Slope = 1.1% to 1.2% Pavement Width = 24.7' (measured)	Slope = 1.2% to 1.3%
Variations (NHDOT Section 3.17.3.4.1)	
0 0 0 5/16" 11/16"	1/2" 1/4" 0 1/8" 0
Cracking	
None observed	
Cores, Gravels, and Subgrade	
Pavement: 3.0" to 4.0" depth (B-3, B-30, B1core). Pavement may be thicker in WB lane. Gravel: 20" to 26" (B-3, B-30)	
Groundwater	
Not measured *	
Other Comments	
Pavement appears to be in good condition. * Piezometers were only installed at Sta 128+35 RT, Sta 159+80 RT, and Sta 191+23 RT.	

2/IIA

128+00

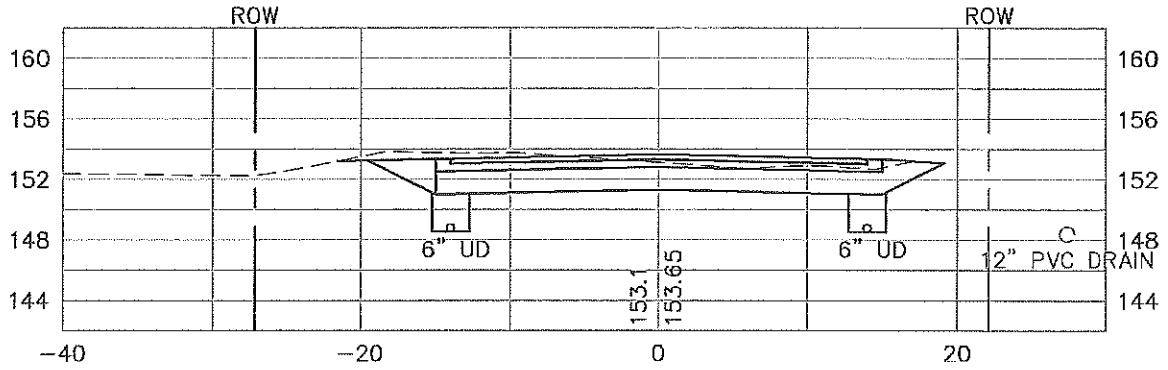

Left	Right
Section Overview	
Design section is raised 0.55' over existing grade. 24" of gravel is specified. Phase IIA pavement installed 6/19/13.	
Paved Road Width (Design = 28') and Crown (Design = 2%)	
Slope = 1.8% to 2.2% Paved Width = 24.8' (measured)	Slope = 1.8% to 2.1%
Variations (NHDOT Section 3.17.3.4.1)	
0 0 0 5/16" 11/16"	5/8" 5/16" 0 0 0
Cracking	
CL cracking observed. In-lane cracking and minor stress cracks observed in EB lane.	
Cores, Gravels, and Subgrade	
Pavement: 3.0" depth measured at TP#1, Sta. 128+35 RT, and B2core. Pavement depth may be thicker in WB lane (B-29). Gravel: 23" to 27" (TP#1, B-29)	
Groundwater	
None observed in Piezometer #1, Sta. 128+35 RT (10/10/14)	
Other Comments	

2/11

128+50 (DRIVE RIGHT)

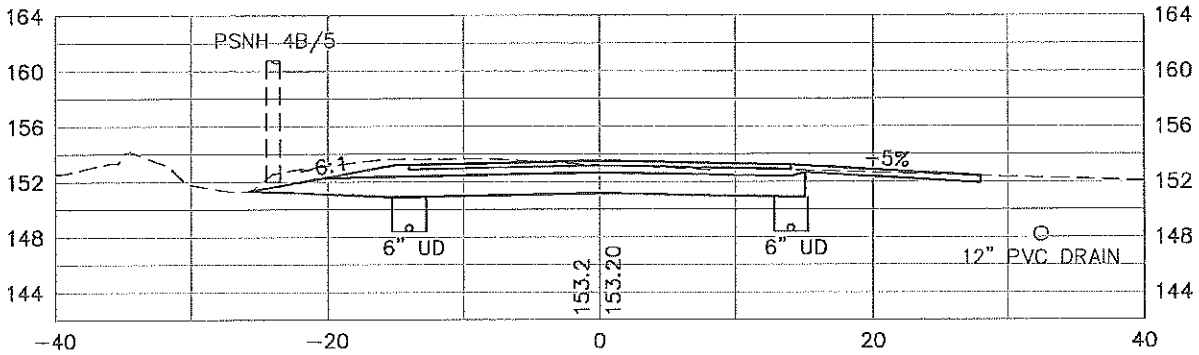

Left	Right
Section Overview	
Design section is raised 0.0' over existing grade. 24" of gravel is specified. Phase IIA pavement installed 6/19/13.	
Paved Road Width (Design = 28') and Crown (Design = 2%)	
Slope = 2.2% to 2.5% Paved Width = 24.5' (measured)	Slope = 1.3% to 1.7%
Variations (NHDOT Section 3.17.3.4.1)	
3/16" 0 0 1/8" 5/16"	0 0 0 3/8" 1/4"
Cracking	
CL cracking observed. In-lane cracking and minor stress cracks observed in EB lane.	
Cores, Gravels, and Subgrade	
Pavement: 3.0" depth measured at TP#1, Sta. 128+35 RT, and B2core. Pavement depth may be thicker in WB lane (B-29). Gravel: 23" to 27" (TP#1, B-29)	
Groundwater	
None observed in Piezometer #1, Sta. 128+35 RT (10/10/14)	
Other Comments	

2/11A

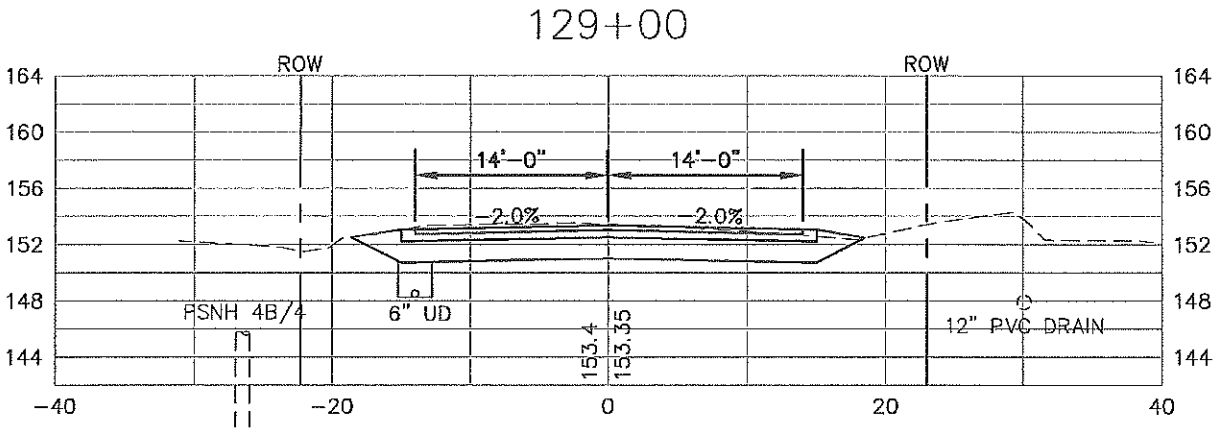

Left	Right
Section Overview	
Design section is lowered 0.05' below existing grade. 24" of gravel is specified. Phase IIA pavement installed 6/19/13.	
Paved Road Width (Design = 28') and Crown (Design = 2%)	
Slope = 2.2% to 2.6% Pavement Width = 24.5' (measured)	Slope = 1.4% to 1.6%
Variations (NHDOT Section 3.17.3.4.1)	
3/16" 0 0 0 0	0 0 0 0 3/16"
Cracking	
CL cracking observed. In-lane cracking and minor stress cracks observed in EB lane.	
Cores, Gravels, and Subgrade	
Pavement: 3.0" depth measured at TP#1, Sta. 128+35 RT, and B2core. Pavement depth may be thicker in WB lane (B-29). Gravel: 23" to 27" (TP#1, B-29)	
Groundwater	
None observed in Piezometer #1, Sta. 128+35 RT (10/10/14)	
Other Comments	

3/1

152+50

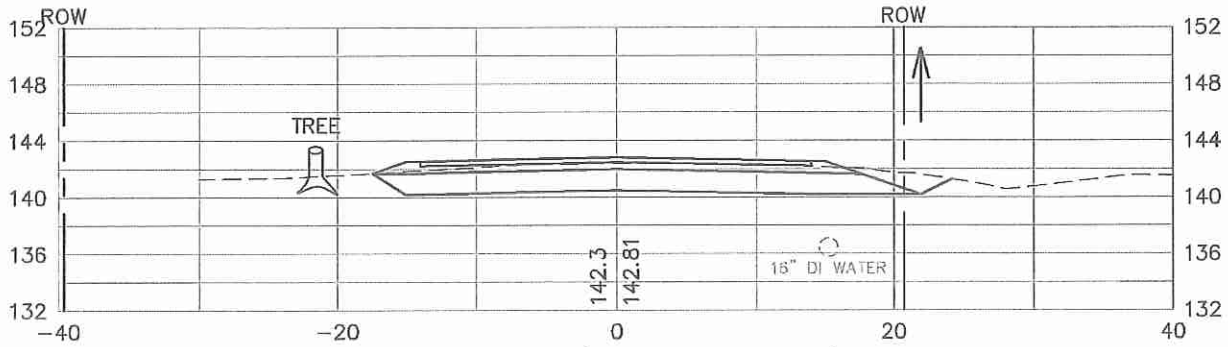

Left	Right
Section Overview	
Design section is raised 0.51' over existing grade. 24" of gravel is specified. Phase I pavement installed 5/9/13.	
Paved Road Width (Design = 28') and Crown (Design = 2%)	
Slope = 1% to 1.4% Paved Width = 28.2' (measured)	Slope = 1.4% to 1.7%
Variations (NHDOT Section 3.17.3.4.1)	
0 0 0 1/4" 1/2"	1/2" 1/4" 0 7/16" 3/8"
Cracking	
CL joint cracking only.	
Cores, Gravels, and Subgrade	
Pavement: 2.8" to 3.5" (B-6, B-26, B3core) Gravel: 21" to 23" (B-6, B-26)	
Groundwater	
Not measured *	
Other Comments	
* Piezometers were only installed at Sta 128+35 RT, Sta 159+80 RT, and Sta 191+23 RT.	

3/1

153+00

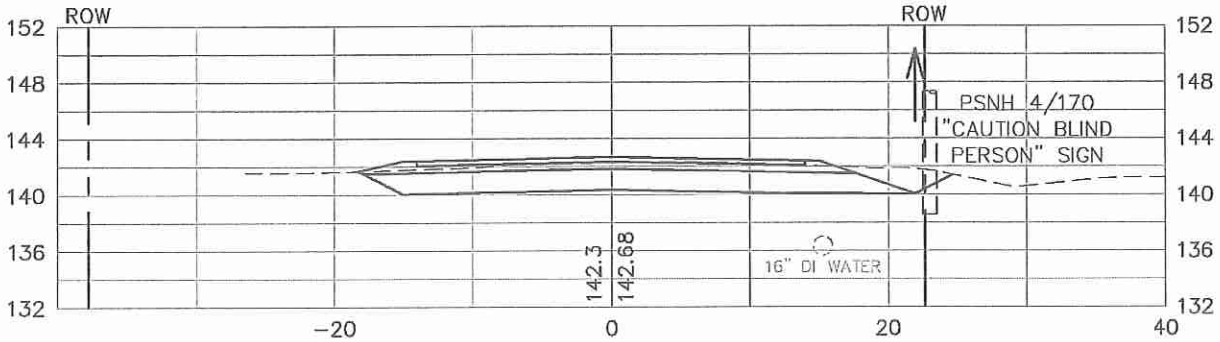

Left	Right
Section Overview	
Design section is raised 0.38' over existing grade. 24" of gravel is specified. Phase I pavement installed 5/9/13.	
Paved Road Width (Design = 28') and Crown (Design = 2%)	
Slope = 0.3% to 0.8% Paved Width = 28.1' (measured)	Slope = 1.1% to 1.3%
Variations (NHDOT Section 3.17.3.4.1)	
0 3/16" 0 1/2" 1-1/4"	2" 1" 0 0 0
Cracking	
CL joint cracking only.	
Cores, Gravels, and Subgrade	
Pavement: 2.8" to 3.5" (B-6, B-26, B3core) Gravel: 21" to 23" (B-6, B-26)	
Groundwater	
Not measured *	
Other Comments	
* Piezometers were only installed at Sta 128+35 RT, Sta 159+80 RT, and Sta 191+23 RT.	

3/1

153+50

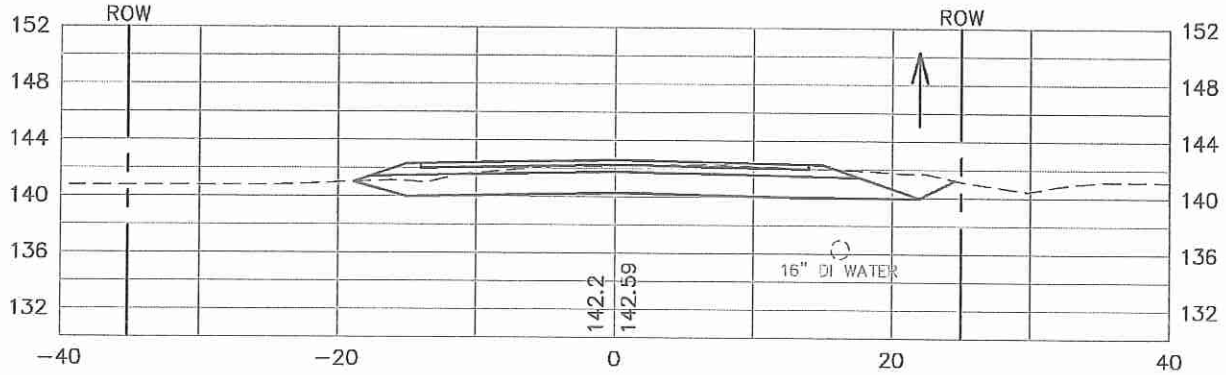

Left	Right
Section Overview	
Design section is raised 0.39' over existing grade. 24" of gravel is specified. Phase I pavement installed 5/9/13.	
Paved Road Width (Design = 28') and Crown (Design = 2%)	
Slope = 0.2% to 0.5% Paved Width = 28.2'	Slope = 1.1% to 1.3%
Variations (NHDOT Section 3.17.3.4.1)	
0 0 0 1/2" 1-1/8"	1-1/2" 3/4" 0 1/8" 1/4"
Cracking	
CL joint cracking only.	
Cores, Gravels, and Subgrade	
Pavement: 2.8" to 3.5" (B-6, B-26, B3core) Gravel: 21" to 23" (B-6, B-26)	
Groundwater	
Not measured *	
Other Comments	
* Piezometers were only installed at Sta 128+35 RT, Sta 159+80 RT, and Sta 191+23 RT.	

4|IIIA

163+50

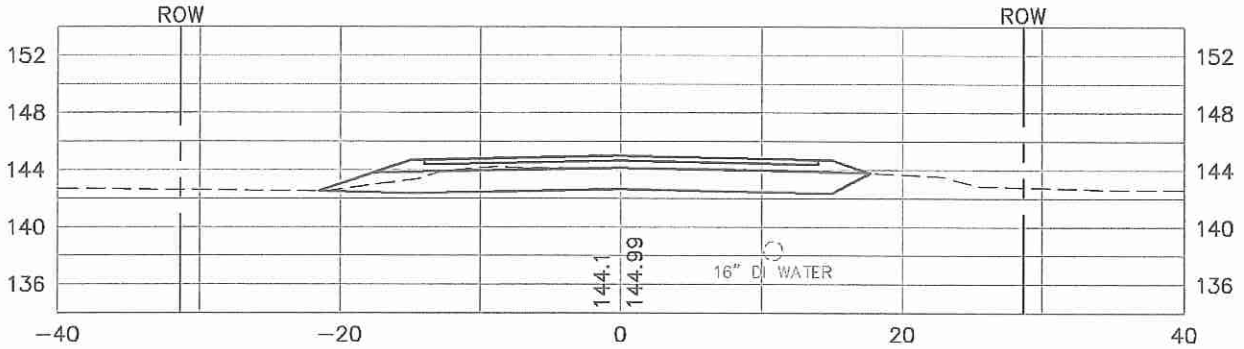

Left	Right
Section Overview	
Design section is raised 0.89' over existing grade. 24" of gravel is specified. Phase IIIA pavement installed 7/18/13.	
Paved Road Width (Design = 28') and Crown (Design = 2%)	
Slope = 1.6% to 1.7% Paved Width = 28.0' (measured)	Slope = 1.2% to 1.3%
Variations (NHDOT Section 3.17.3.4.1)	
0 3/16" 0 3/16" 3/16"	0 1/8" 0 1/8" 3/16"
Cracking	
CL cracking observed. In-lane cracking observed in WB lane.	
Cores, Gravels, and Subgrade	
Pavement: 2.9" EB to 3.5" WB (B-7, B-25, B5core) Gravel: 24" depth (B-7, B-25)	
Groundwater	
Not measured *	
Other Comments	
* Piezometers were only installed at Sta 128+35 RT, Sta 159+80 RT, and Sta 191+23 RT.	

4/IIIA

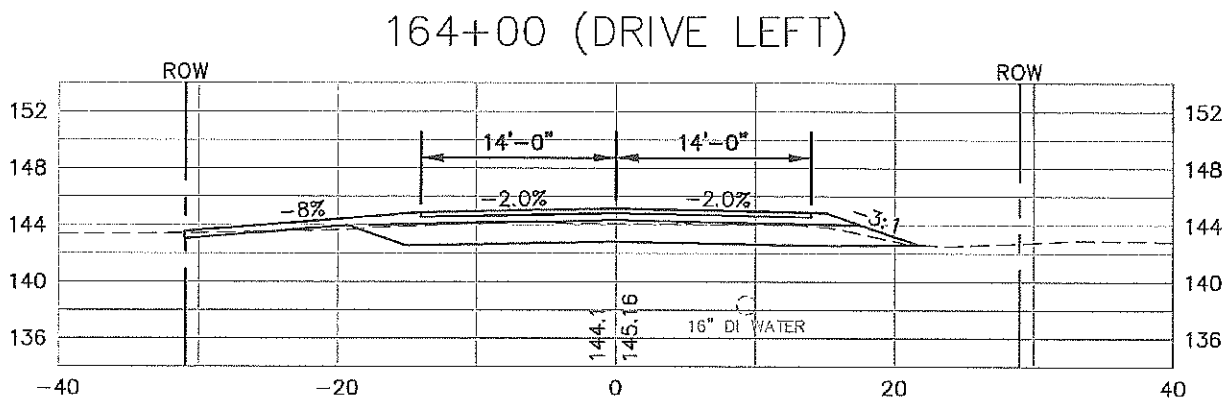

Left	Right
Section Overview	
Design section is raised 1.06' over existing grade. 24" of gravel is specified. Phase IIIA pavement installed 7/18/13.	
Paved Road Width (Design = 28') and Crown (Design = 2%)	
Slope = 1.0% to 1.4% Paved Width = 28.1' (measured)	Slope = 1.7% to 1.9%
Variations (NHDOT Section 3.17.3.4.1)	
0 7/16" 1/8" 3/16" 0	5/16" 3/8" 0 0 0
Cracking	
CL cracking observed. In-lane cracking observed in WB lane.	
Cores, Gravels, and Subgrade	
Pavement: 2.9" EB to 3.5" WB (B-7, B-25, B5core) Gravel: 24" depth (B-7, B-25)	
Groundwater	
Not measured *	
Other Comments	
* Piezometers were only installed at Sta 128+35 RT, Sta 159+80 RT, and Sta 191+23 RT.	

4/IIIA

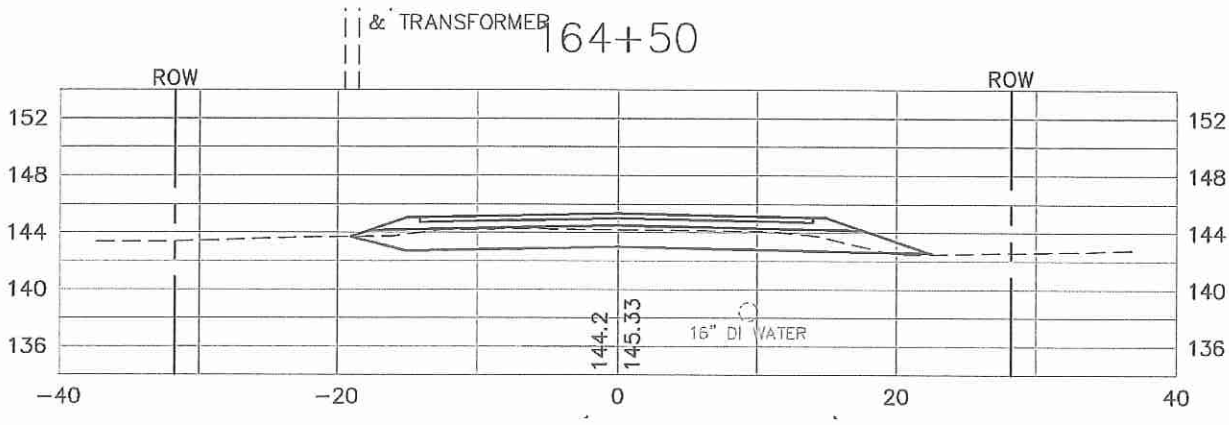

	Left	Right
Section Overview		
Design section is raised 1.13' over existing grade. 24" of gravel is specified. Phase IIIA pavement installed 7/18/13.		
Paved Road Width (Design = 28') and Crown (Design = 2%)		
	Slope = 0.6% to 1.2% Paved Width = 28.2' (measured)	Slope = 1.7% to 2.1%
Variations (NHDOT Section 3.17.3.4.1)		
	0 7/16" 0 9/16" 7/16"	1/2" 5/16" 0 0 0
Cracking		
CL cracking observed. In-lane cracking observed in WB lane.		
Cores, Gravels, and Subgrade		
Pavement: 2.9" EB to 3.5" WB (B-7, B-25, B5core) Gravel: 24" depth (B-7, B-25)		
Groundwater		
Not measured *		
Other Comments		
* Piezometers were only installed at Sta 128+35 RT, Sta 159+80 RT, and Sta 191+23 RT.		

6/VI

229+00

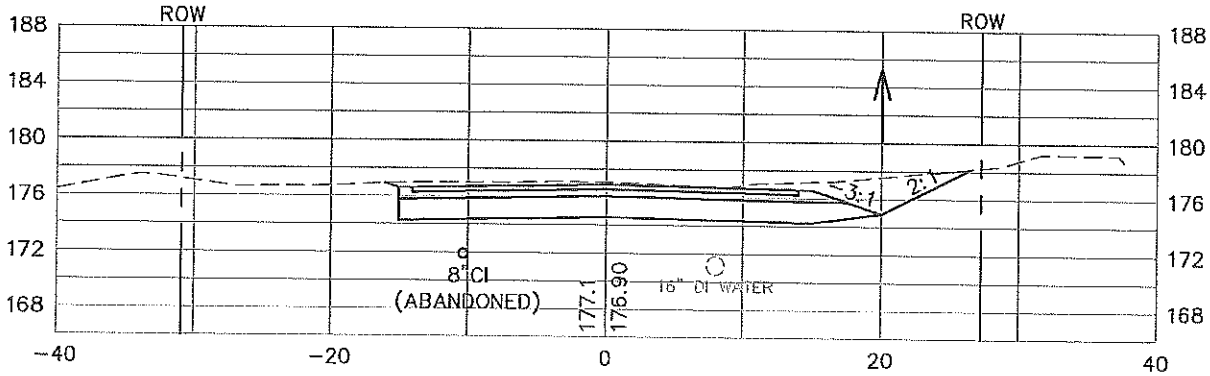

Left	Right
Section Overview	
Design section is lowered 0.2' below existing grade. 24" of gravel is specified. Phase VI pavement installed 9/27/13.	
Paved Road Width (Design = 28') and Crown (Design = 2%)	
Slope = 1.7% to 2.2% Total paved road width = 27.3'	Slope = 2.1% to 2.2%
Variations (NHDOT Section 3.17.3.4.1)	
0 3/16" 0 0 0	0 0 0 0 0
Cracking	
CL cracking. Minor stress cracking in WB lane.	
Cores, Gravels, and Subgrade	
Pavement: 2.8" to 3.5" depth (B-14, B9core) Gravel: 23" depth (B-14)	
Groundwater	
Not measured *	
Other Comments	
* Piezometers were only installed at Sta 128+35 RT, Sta 159+80 RT, and Sta 191+23 RT.	

Proj #: 1876
Sta. Reference: "City of Dover NH Tolend Rd Reconstruction Plans" by CMA Engineers, dated Sept. 2012

City of Dover, Tolend Road
Pavement Comparision Worksheet

Date: 10/28/2014
Field Crew: Tom Bradley
Roxanne Gerard

Area #1 (Phase IIA) - Field Inspection Area 117+00 to 118+00

Cross Section Comparision

Station	Width	Left	xslope	Center	xslope	Right
117+00	24.5					
FG			-2.00%	156.95	-2.00%	
BG			-2.00%	156.83	-2.00%	
FM		155.03	-0.82%	155.13	-1.55%	154.94
117+50	24.5					
FG			-2.00%	156.80	-2.00%	
BG			-2.00%	156.68	-2.00%	
FM		154.90	-0.73%	154.99	-2.20%	154.72
118+00	24.7					
FG			-2.00%	156.65	-2.00%	
BG			-2.00%	156.53	-2.00%	
FM		154.70	-1.13%	154.84	-1.13%	154.70

Profile Comparision

Start & End Sta	Beg Grade	End Grade	% Grade
117+00 to 117+50			
BG	156.83	156.68	-0.30%
FM	155.13	154.99	-0.28%
117+50 to 118+00			
BG	156.68	156.53	-0.30%
FM	154.99	154.84	-0.30%

Area #2 (Phase IIA) - Field Inspection Area 128+00 to 129+00

Cross Section Comparision

Station	Width	Left	xslope	Center	xslope	Right
128+00	24.8					
FG			-2.00%	153.65	-2.00%	
BG			-2.00%	153.53	-2.00%	
FM		153.15	-2.18%	153.42	-2.10%	153.16
128+50	24.5					
FG			-2.00%	153.50	-2.00%	
BG			-2.00%	153.38	-2.00%	
FM		152.89	-2.45%	153.19	-1.71%	152.98
129+00	24.5					
FG			-2.00%	153.35	-2.00%	
BG			-2.00%	153.23	-2.00%	
FM		152.78	-2.61%	153.10	-1.55%	152.91

Profile Comparision

Start & End Sta	Beg Grade	End Grade	% Grade
128+00 to 128+50			
BG	153.53	153.38	-0.30%
FM	153.42	153.19	-0.46%
128+50 to 129+00			
BG	153.38	153.23	-0.30%
FM	153.19	153.10	-0.18%

Area #3 (Phase I) - Field Inspection Area 152+50 to 153+50

Cross Section Comparision

Station	Width	Left	xslope	Center	xslope	Right
152+50	28.2					
FG			-2.00%	142.81	-2.00%	
BG			-2.00%	142.69	-2.00%	
FM		142.28	-1.42%	142.48	-1.42%	142.28
153+00	28.1					
FG			-2.00%	142.68	-2.00%	
BG			-2.00%	142.56	-2.00%	
FM		142.19	-0.28%	142.23	-1.07%	142.08
153+50	28.2					
FG			-2.00%	142.59	-2.00%	
BG			-2.00%	142.47	-2.00%	
FM		142.03	-0.21%	142.06	-1.13%	141.90

Profile Comparision

Start & End Sta	Beg Grade	End Grade	% Grade
152+50 to 153+00			
BG	142.69	142.56	-0.26%
FM	142.48	142.23	-0.50%
153+00 to 153+50			
BG	142.56	142.47	-0.18%
FM	142.23	142.06	-0.34%

Proj #: 1876
Sta. Reference: "City of Dover NH Tolend Rd Reconstruction Plans" by CMA Engineers, dated Sept. 2012

City of Dover, Tolend Road
Pavement Comparision Worksheet

Date: 10/28/2014
Field Crew: Tom Bradley
Roxanne Gerard

Area #4 (Phase IIIA) - Field Inspection Area 163+50 to 164+50										
Cross Section Comparision							Profile Comparision			
Station	Width	Left	xslope	Center	xslope	Right	Start & End Sta	Beg Grade	End Grade	% Grade
163+50	28.0						163+50 to 164+00			
FG			-2.00%	144.99	-2.00%		BG	144.87	145.04	0.34%
BG			-2.00%	144.87	-2.00%		FM	144.75	144.82	0.14%
FM		144.53	-1.57%	144.75	-1.21%	144.58	164+00 to 164+50			
164+00	28.1						BG	145.04	145.21	0.34%
FG			-2.00%	145.16	-2.00%		FM	144.82	144.96	0.28%
BG			-2.00%	145.04	-2.00%					
FM		144.68	-1.00%	144.82	-1.85%	144.56				
164+50	28.2									
FG			-2.00%	145.33	-2.00%					
BG			-2.00%	145.21	-2.00%					
FM		144.88	-0.57%	144.96	-2.06%	144.67				

Area #5 (Phase IV and VII) - Field Inspection Area 191+00 to 192+00										
Cross Section Comparision							Profile Comparision			
Station	Width	Left	xslope	Center	xslope	Right	Start & End Sta	Beg Grade	End Grade	% Grade
191+00	27.9						191+00 to 191+50			
FG			-2.00%	150.45	-2.00%		BG	150.33	150.57	0.48%
BG			-2.00%	150.33	-2.00%		FM	150.39	150.56	0.34%
FM		150.18	-1.51%	150.39	-2.29%	150.07	191+50 to 192+00			
191+50	27.6						BG	150.57	150.76	0.38%
FG			-2.00%	150.69	-2.00%		FM	150.56	150.54	-0.04%
BG			-2.00%	150.57	-2.00%					
FM		150.27	-2.10%	150.56	-1.96%	150.29				
192+00	27.1									
FG			-2.00%	150.88	-2.00%					
BG			-2.00%	150.76	-2.00%					
FM		150.25	-2.14%	150.54	-1.40%	150.35				

Area #6 (Phase VI) - Field Inspection Area 228+00 to 229+00										
Cross Section Comparision							Profile Comparision			
Station	Width	Left	xslope	Center	xslope	Right	Start & End Sta	Beg Grade	End Grade	% Grade
228+00	30.8						228+00 to 228+50			
FG			-2.00%	177.84	-2.00%		BG	177.72	177.41	-0.62%
BG			-2.00%	177.72	-2.00%		FM	177.62	177.36	-0.52%
FM		177.31	-2.01%	177.62	-2.21%	177.28	228+50 to 229+00			
228+50	31.6						BG	177.41	176.78	-1.26%
FG			-2.00%	177.53	-2.00%		FM	177.36	176.77	-1.18%
BG			-2.00%	177.41	-2.00%					
FM		177.17	-1.48%	177.36	-1.77%	177.08				
229+00	27.3									
FG			-2.00%	176.90	-2.00%					
BG			-2.00%	176.78	-2.00%					
FM		176.47	-2.20%	176.77	-2.12%	176.48				

Average	-1.55%	-1.71%
Max	-2.61%	-2.29%
Min	-0.21%	-1.07%

CRACK INVENTORY - SUMMARY

Project: Tolend Road Peer Review
Prepared by: Underwood Engineers
Date: October 14, 2014

Area ID	Location			**In-Lane** Long. Cracks (feet)			**C.L.** Cracking Observed	Transverse Cracks			Alligator Cracking Observed	Construct. Phase
	Station	to	Station	<1/8" (feet)	1/8" to 3/8"	>3/8" (feet)		<1/8" (feet)	1/8" to 3/8"	>3/8" (feet)		
1	117+00	to	118+00	0	0	0	No	0	0	0	-	IIA
2	128+00	to	129+00	3	0	9	Yes	12	0	0	6 areas (minor stress crks)	IIA
3	152+50	to	153+50	0	0	0	Yes	0	0	0	-	I
4	163+50	to	164+50	8	33	31	Yes	0	0	0	-	IIIA
5	191+00	to	192+00	0	5	8	Yes	0	0	33	2 areas (marked cut)	IV, V
6	228+00	to	229+00	0	0	0	Yes	0	0	0	1 area (minor stress crks)	VI
Total Observed				11	38	48		12	0	33	9 areas noted (7 minor)	

UNDERWOOD ENGINEERS, INC.
25 Vaughan Mall, Unit 1
Portsmouth, NH 03801-4012
Tel: (603) 436-6192
Fax: (603) 431-4733

99 North State Street
Concord, NH 03301-4334
Tel: (603) 230-9898
Fax: (603) 230-9899

JOB #1 BYE - TOWNSEND BRIDGE
SHEET NO. 1 OF 6
CALCULATED BY PMDC DATE 10/10/14
CHECKED BY _____ DATE _____
SCALE _____

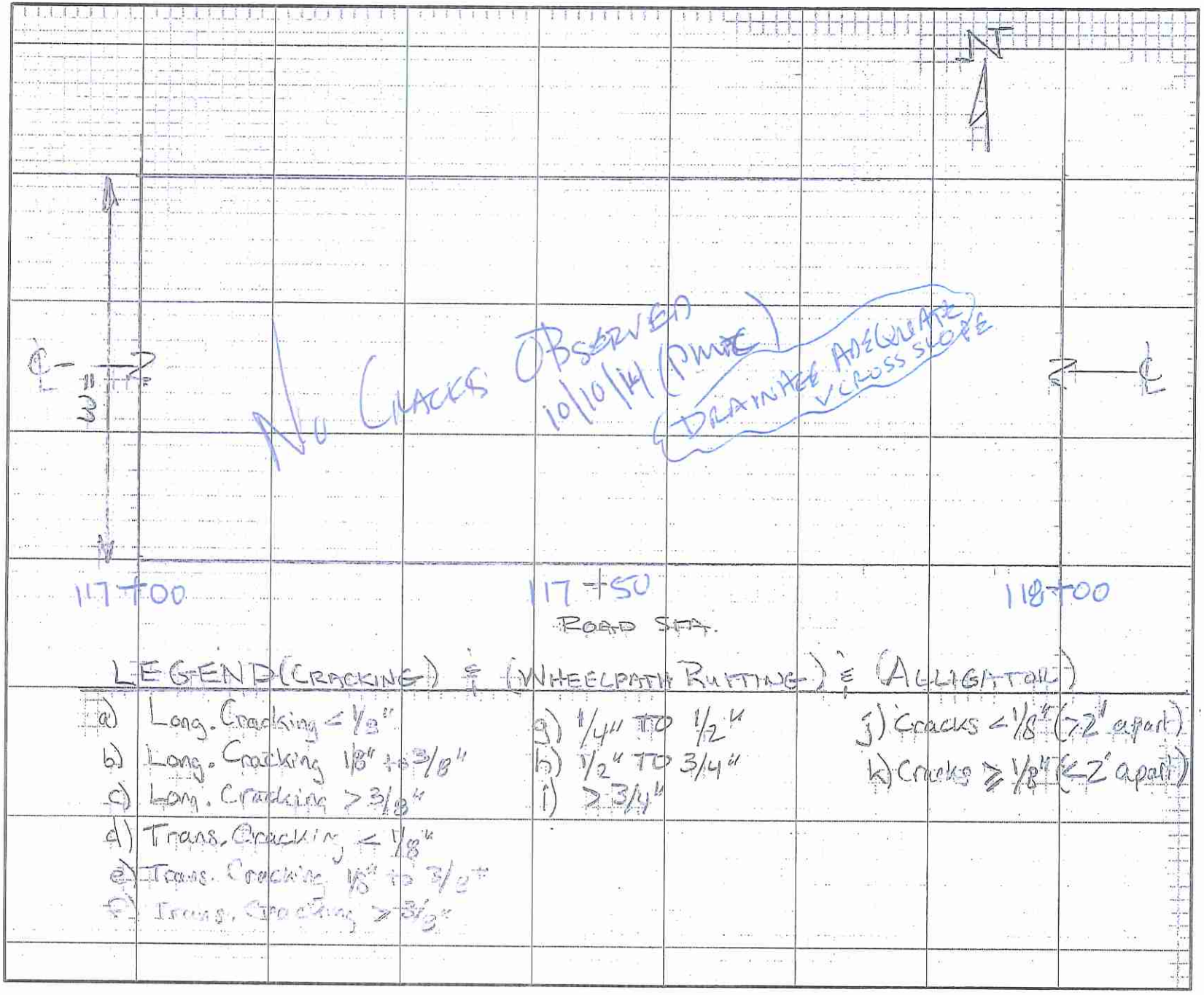

UNDERWOOD ENGINEERS, INC.
25 Vaughan Mall, Unit 1
Portsmouth, NH 03801-4012
Tel: (603) 436-6192
Fax: (603) 431-4733

99 North State Street
Concord, NH 03301-4334
Tel: (603) 230-9898
Fax: (603) 230-9899

JOB #1876 - TOWND POND
SHEET NO. 2 OF 6
CALCULATED BY PMR DATE 10/10/14
CHECKED BY _____ DATE _____
SCALE _____

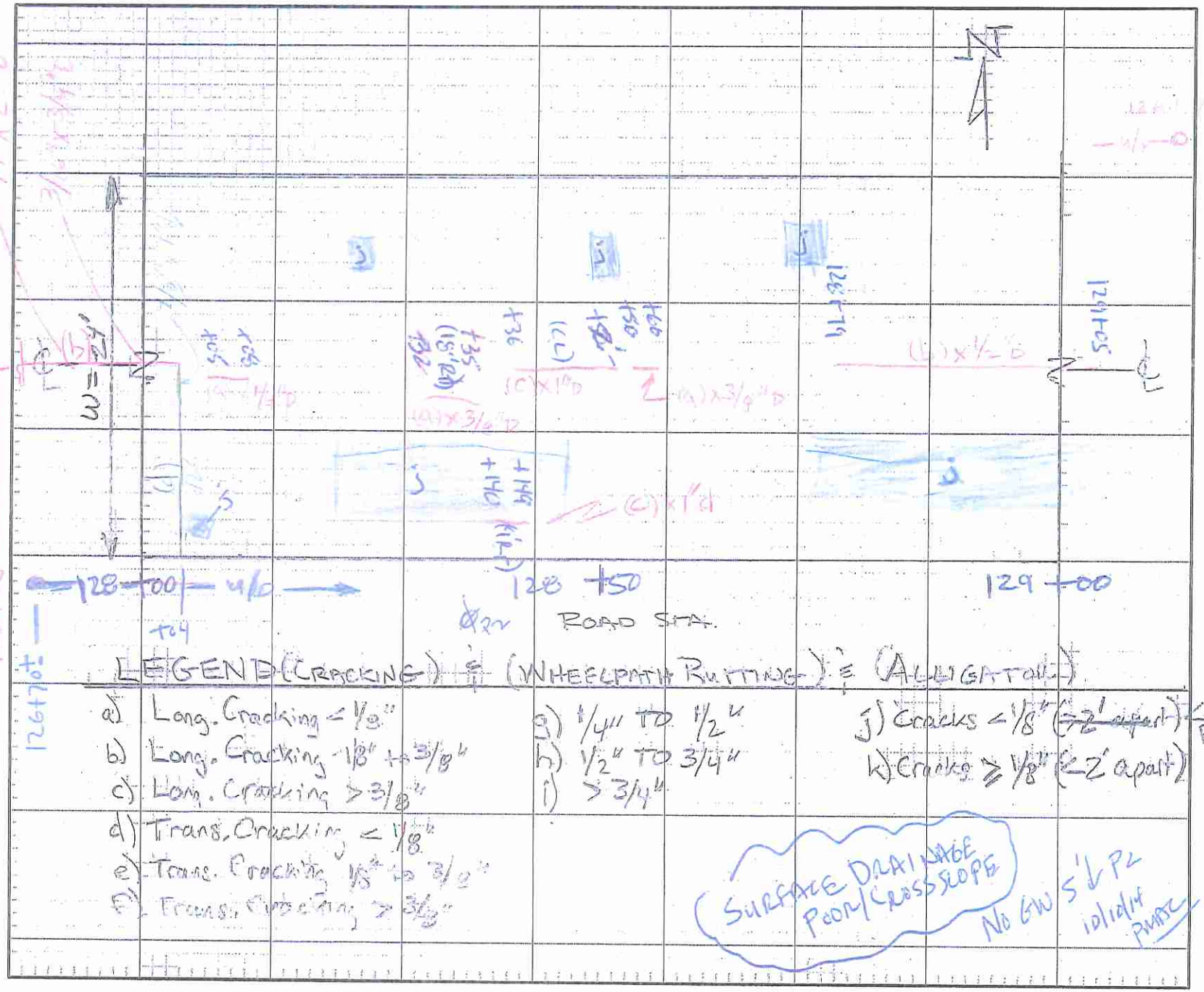

UNDERWOOD ENGINEERS, INC.
99 North State Street
Concord, NH 03301-4334
Tel: (603) 230-9898
Fax: (603) 230-9899

Than Mall, Unit 1
Dth, NH 03801-4012
.: (603) 436-6192
Fax: (603) 431-4733
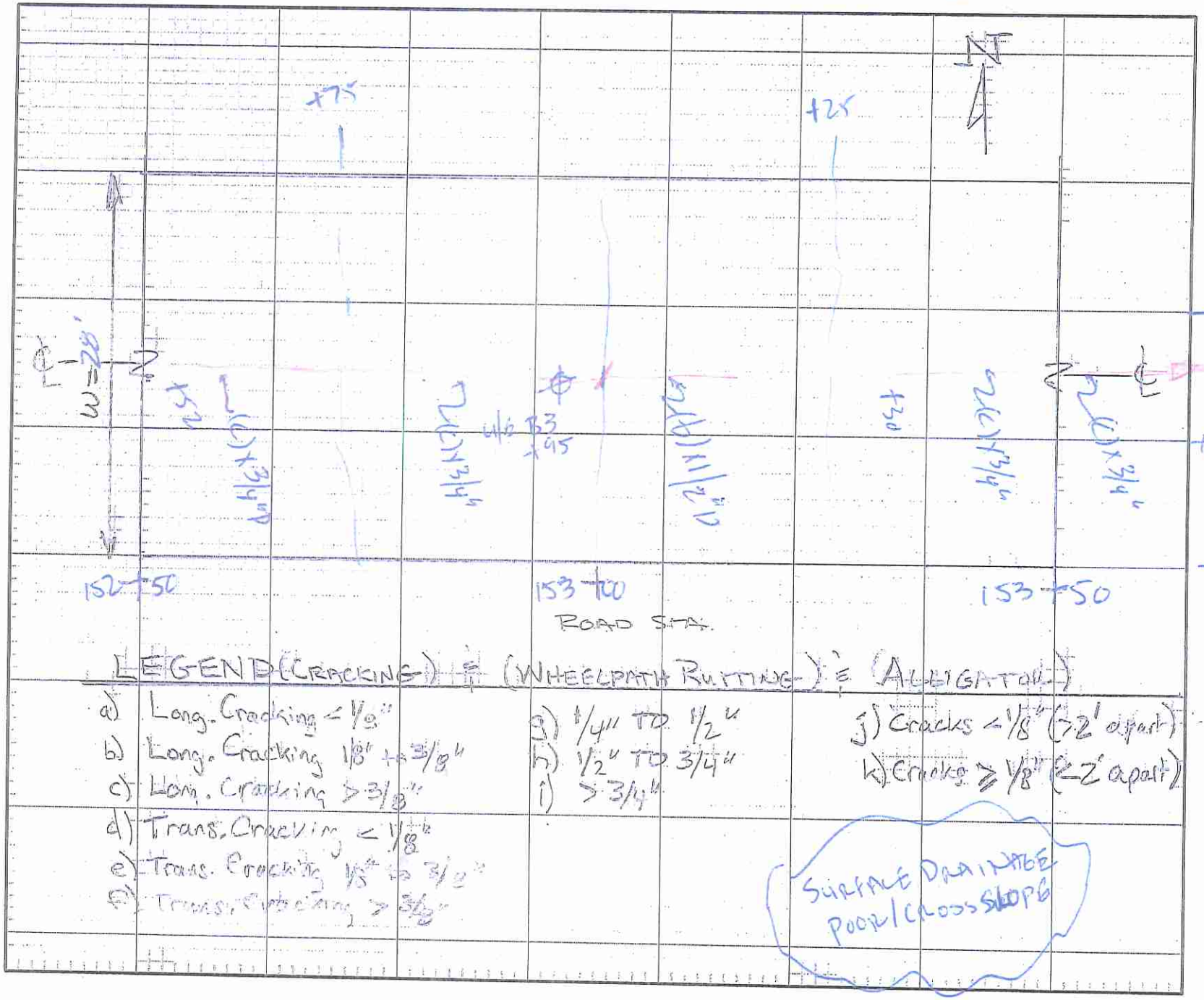
JOB #18376 - TOWNS Bond
SHEET NO. 3 OF 6
CALCULATED BY P. MAC DATE 10/10/14
CHECKED BY DATE
SCALE